Features

* High luminous intensity output.
* Low power consumption.
* High efficiency.
* Versatile mounting on PCB or panel.
* I.C. Compatible / low current requirements.
* Popular T-1 3/4 diameter.

Package Dimensions

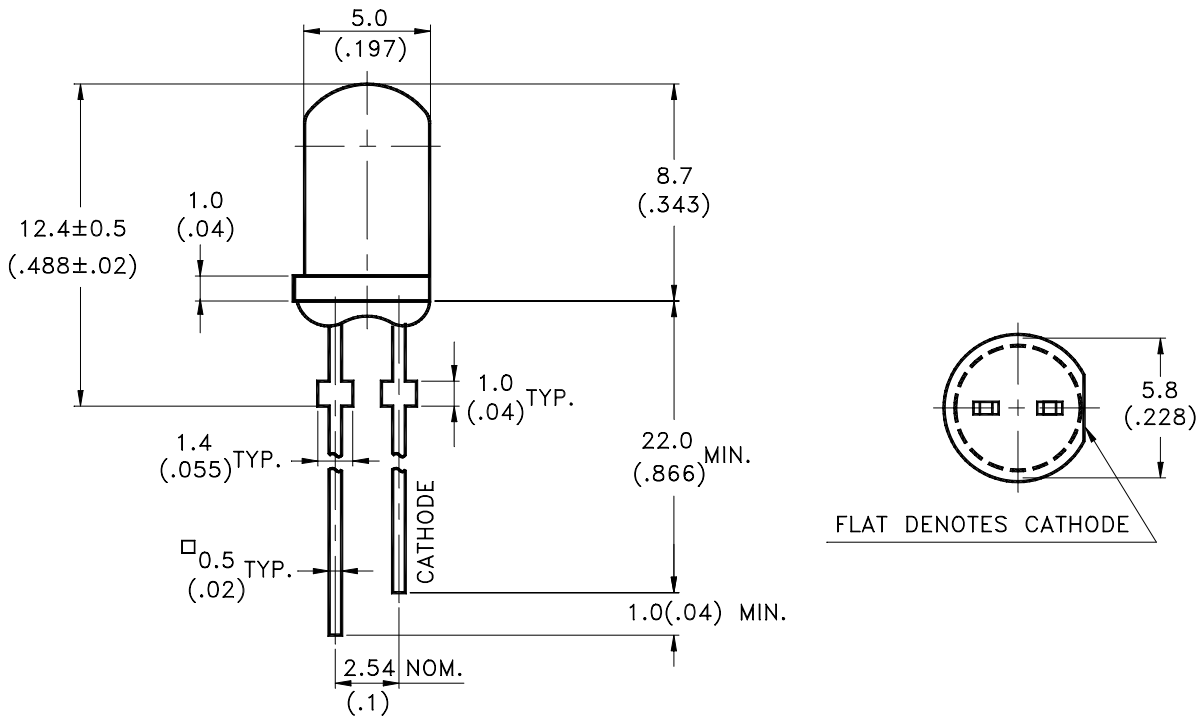

Part No.	Lens	Source Color
LTL2T3TGKS6-012	Water Clear	InGaN Green

Notes:

1. All dimensions are in millimeters (inches).
2. Tolerance is ±0.25mm(.010") unless otherwise noted.
3. Lead spacing is measured where the leads emerge from the package.
4. Specifications are subject to change without notice.

Absolute Maximum Ratings at TA=25℃

Parameter	Maximum Rating	Unit
Power Dissipation	120	mW
Peak Forward Current (1/10 Duty Cycle, 0.1ms Pulse Width)	100	mA
DC Forward Current	30	mA
Derating Linear From 30℃	0.5	mA/℃
Reverse Voltage	5	V
Operating Temperature Range	-40℃ to + 85℃	
Storage Temperature Range	-55℃ to + 100℃	
Lead Soldering Temperature [1.6mm(.063") From Body]	260℃ for 5 Seconds	

Electrical / Optical Characteristics at T_A=25℃

Parameter	Symbol	Min.	Typ.	Max.	Unit	Test Condition
Luminous Intensity	I_V	880	2500		mcd	I_F = 20mA Note 1,5
Viewing Angle	$2\theta_{1/2}$		30		deg	Note 2 (Fig.5)
Dominant Wavelength	λ_d		525		nm	Note 4
Spectral Line Half-Width	$\Delta\lambda$		35		nm	
Forward Voltage	V_F		3.5	4.0	V	I_F = 20mA
Reverse Current	I_R			100	μA	V_R = 5V

NOTE: 1. Luminous intensity is measured with a light sensor and filter combination that approximates the CIE eye-response curve.

2. $\theta_{1/2}$ is the off-axis angle at which the luminous intensity is half the axial luminous intensity.
3. The dominant wavelength, λd is derived from the CIE chromaticity diagram and represents the single wavelength which defines the color of the device.
4. Iv classification code is marked on each packing bag.
5. The Iv guarantee should be added ±15% tolerance.
6. Precautions in handling:
   - When soldering, leave 2mm of minimum clearance from the resin to the soldering point.
   - Dipping the resin to solder must be avoided.
   - Correcting the soldered position after soldering must be avoided.
   - In soldering, do not apply any stress to the lead frame particularly when heated.
   - When forming a lead, make sure not to apply any stress inside the resin.
   - Lead forming must be done before soldering.
   - It is necessary to cut the lead frame at normal temperature.
7. Caution in ESD:
   Static Electricity and surge damages the LED. It is recommend to use a wrist band or anti-electrostatic glove when handling the LED. All devices, equipment and machinery must be properly grounded.

Typical Electrical / Optical Characteristics Curves

(25℃ Ambient Temperature Unless Otherwise Noted)

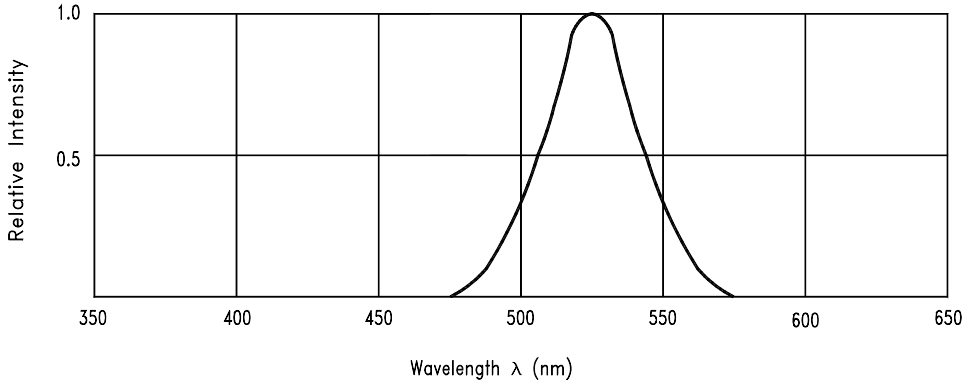

Fig.1 Relative Intensity vs. Wavelength

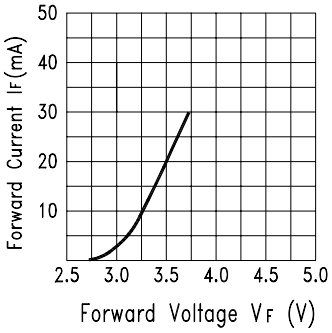

Fig.2 Forward Current vs. Forward Voltage

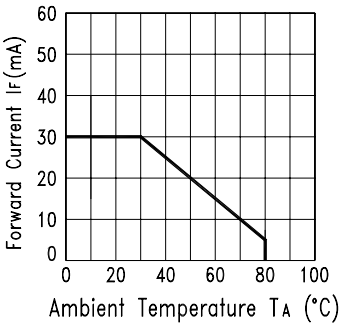

Fig.3 Forward Current Derating Curve

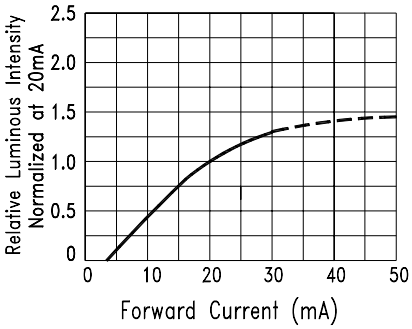

Fig.4 Relative Luminous Intensity vs. Forward Current

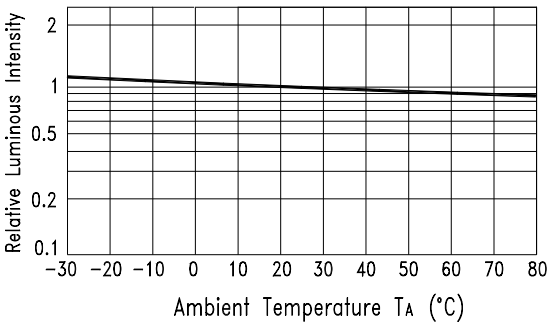

Fig.5 Luminous Intensity vs. Ambient Temperature

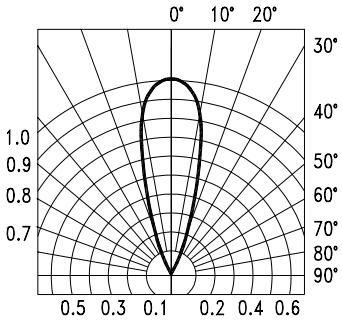

Fig.6 Spatial Distribution

Features

* Compatible with radial lead automatic insertion equipment.
* Most radial lead plastic lead lamps available packaged in tape and reel.
* 2.54mm (0.1") straight lead spacing available.
* Reel packaging simplifies handling and testing.
  Folding packaging is available by adding suffix “A” on option.

Package Dimensions

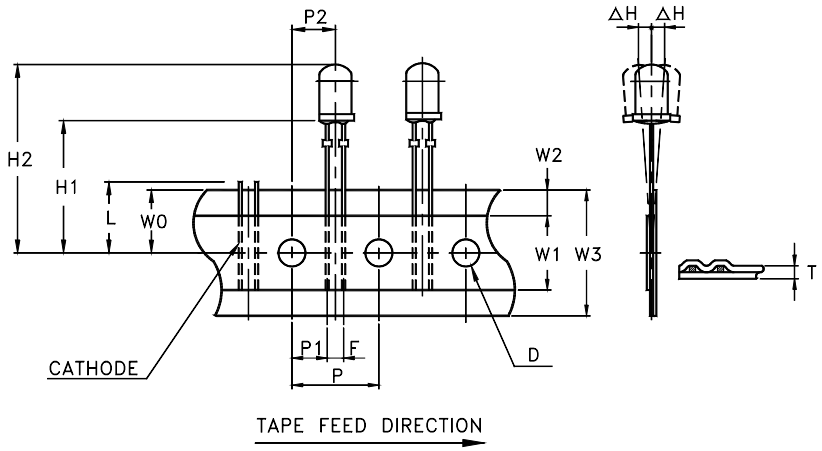

Item	Symbol	Specification			
		Minimum		Maximum	
		mm	inch	mm	inch
Tape Feed Hole Diameter	D	3.8	0.149	4.2	0.165
Component Lead Pitch	F	2.3	0.091	3.0	0.118
Front to Rear Deflection	△H	--	--	2.0	0.078
Feed Hole to Bottom of Component	H1	21.5	0.846	22.5	0.886
Feed Hole to Overall Component Height	H2	29.9	1.177	31.5	1.240
Lead Length After Component Height	L	W0		11.0	0.433
Feed Hole Pitch	P	12.4	0.488	13.0	0.511
Lead Location	P1	4.4	0.173	5.8	0.228
Center of Component Location	P2	5.05	0.198	7.6`5	0.301
Total Tape Thickness	T	--	--	0.90	0.035
Feed Hole Location	W0	8.5	0.334	9.75	0.384
Adhesive Tape Width	W1	14.5	0.571	15.5	0.610
Adhesive Tape Position	W2	0	0	3.0	0.118
Tape Width	W3	17.5	0.689	19.0	0.748

Packing Spec

2 reel per inner carton
total 2000pcs per inner carton

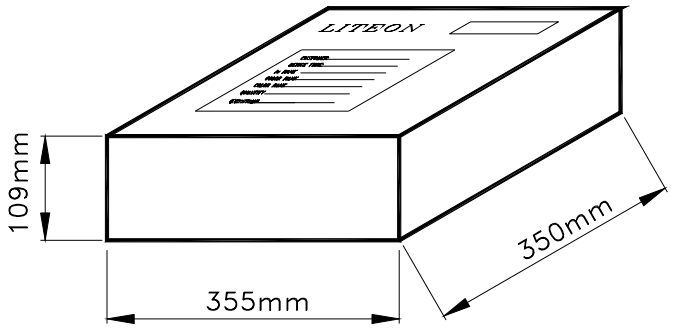

Tolerance: ±5mm

6 Inner cartons per outer carton
total 12000 pcs per outer carton
In every shipping lot, only the last pack will be non-full packing

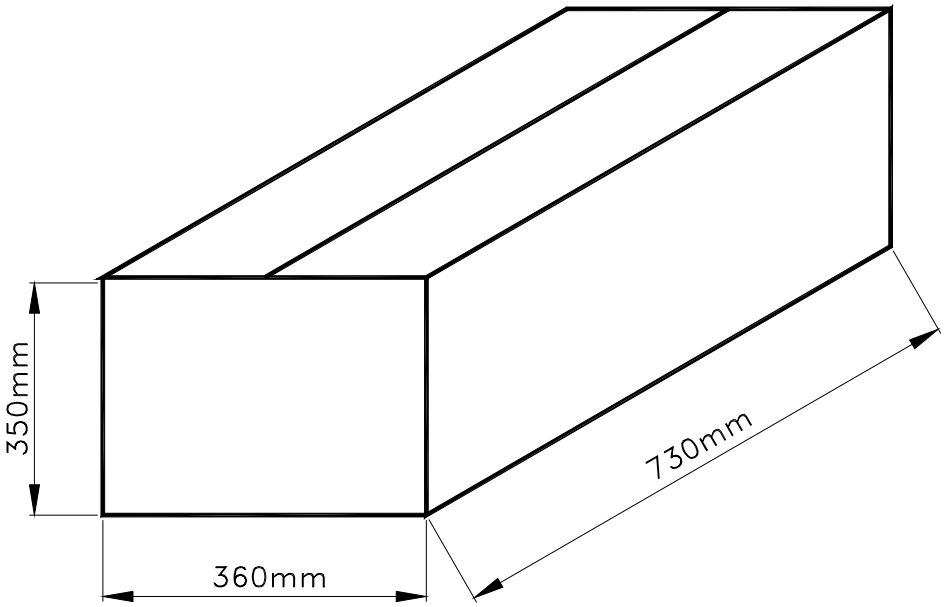

Bin Code List For Reference

Luminous Intensity Iv(mcd) IF@20mA		
Bin Code	Min.	Max.
P	880	1150
Q	1150	1500
R	1500	1900
S	1900	2500
T	2500	3200
U	3200	4200

Note: Tolerance of each bin limit is ±15%

Dominant Wavelength λd(nm) IF@20mA		
Bin Code	Min.	Max.
G07	514.0	516.0
G08	516.0	518.0
G09	518.0	520.0
G10	520.0	523.0
G11	523.0	527.0
G12	527.0	531.0
G13	531.0	535.0

Note: Tolerance of each bin limit is ±1nm

CAUTIONS

1. Application

The LEDs described here are intended to be used for ordinary electronic equipment (such as office equipment, communication equipment and household applications).Consult Liteon's Sales in advance for information on applications in which exceptional reliability is required, particularly when the failure or malfunction of the LEDs may directly jeopardize life or health (such as in aviation, transportation, traffic control equipment, medical and life support systems and safety devices).

2. Storage

The storage ambient for the LEDs should not exceed 30°C temperature or 70% relative humidity.
It is recommended that LEDs out of their original packaging are used within three months.
For extended storage out of their original packaging, it is recommended that the LEDs be stored in a sealed container with appropriate desiccant or in desiccators with nitrogen ambient.

3. Cleaning

Use alcohol-based cleaning solvents such as isopropyl alcohol to clean the LEDs if necessary.

4. Lead Forming & Assembly

During lead forming, the leads should be bent at a point at least 3mm from the base of LED lens.
Do not use the base of the lead frame as a fulcrum during forming.
Lead forming must be done before soldering, at normal temperature.
During assembly on PCB, use minimum clinch force possible to avoid excessive mechanical stress.

5. Soldering

When soldering, leave a minimum of 2mm clearance from the base of the lens to the soldering point.
Dipping the lens into the solder must be avoided.
Do not apply any external stress to the lead frame during soldering while the LED is at high temperature.

Recommended soldering conditions :

Soldering iron		Wave soldering	
Temperature Soldering time	300°C Max. 3 sec. Max. (one time only)	Pre-heat Pre-heat time Solder wave Soldering time	100°C Max. 60 sec. Max. 260°C Max. 10 sec. Max.

Note: Excessive soldering temperature and/or time might result in deformation of the LED lens or catastrophic failure of the LED

6. Drive Method

An LED is a current-operated device. In order to ensure intensity uniformity on multiple LEDs connected in parallel in an application, it is recommended that a current limiting resistor be incorporated in the drive circuit, in series with each LED as shown in Circuit A below.

Circuit model A

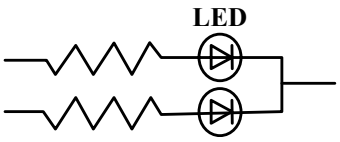

Circuit model B

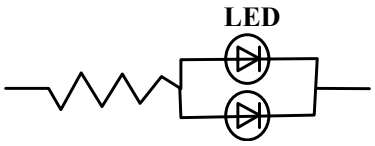

(A) Recommended circuit

(B) The brightness of each LED might appear different due to the differences in the I-V characteristics of those LEDs

7. ESD (Electrostatic Discharge)

Static Electricity or power surge will damage the LED.

Suggestions to prevent ESD damage:

- Use a conductive wrist band or anti- electrostatic glove when handling these LEDs
- All devices, equipment, and machinery must be properly grounded
- Work tables, storage racks, etc. should be properly grounded
- Use ion blower to neutralize the static charge which might have built up on surface of the LEDs plastic lens as a result of friction between LEDs during storage and handing

Suggested checking list :

Training and Certification

1. Everyone working in a static-safe area is ESD-certified?
2. Training records kept and re-certification dates monitored?

Static-Safe Workstation & Work Areas

1. Static-safe workstation or work-areas have ESD signs?
2. All surfaces and objects at all static-safe workstation and within 1 ft measure less than 100V?
3. All ionizer activated, positioned towards the units?
4. Each work surface mats grounding is good?

Personnel Grounding

1. Every person (including visitors) handling ESD sensitive (ESDS) items wear wrist strap, heel strap or conductive shoes with conductive flooring?
2. If conductive footwear used, conductive flooring also present where operator stand or walk?
3. Garments, hairs or anything closer than 1 ft to ESD items measure less than 100V*?
4. Every wrist strap or heel strap/conductive shoes checked daily and result recorded for all DSL?
5. All wrist strap or heel strap checkers calibration up to date?
   Note: *50V for Blue LED.

Device Handling

1. Every ESDS items identified by EIA-471 labels on item or packaging?
2. All ESDS items completely inside properly closed static-shielding containers when not at static-safe workstation?
3. No static charge generators (e.g. plastics) inside shielding containers with ESDS items?
4. All flexible conductive and dissipative package materials inspected before reuse or recycle?

Others

1. Audit result reported to entity ESD control coordinator?
2. Corrective action from previous audits completed?
3. Are audit records complete and on file?

8. Reliability Test

Classification	Test Item	Test Condition	Reference Standard
Endurance Test	Operation Life	Ta= Under Room Temperature As Per Data Sheet Maximum Rating *Test Time= 1000HRS (-24HRS,+72HRS)	MIL-STD-750D:1026 (1995) MIL-STD-883D:1005 (1991) JIS C 7021:B-1 (1982)
	High Temperature High Humidity Storage	Ta= 65±5℃ RH= 90 ～ 95% Test Time= 240HRS±2HRS	MIL-STD-202F: 103B(1980) JIS C 7021 : B-11(1982)
	High Temperature High Humidity Reverse BIAS	Ta= 65±5℃ RH= 90 ～ 95% VR=5V Test Time = 500HRS (-24HRS, +48HRS)	JIS C 7021 : B-11(1982)
	High Temperature Storage	Ta= 105±5℃ *Test Time= 1000HRS (-24HRS,+72HRS)	MIL-STD-883D:1008 (1991) JIS C 7021:B-10 (1982)
	Low Temperature Storage	Ta= -55±5℃ *Test Time=1000HRS (-24HRS,+72HRS)	JIS C 7021:B-12 (1982)
Environmental Test	Temperature Cycling	105℃ ～ 25℃ ～ -55℃ ～ 25℃ 30mins 5mins 30mins 5mins 10 Cycles	MIL-STD-202F:107D (1980) MIL-STD-750D:1051(1995) MIL-STD-883D:1010 (1991) JIS C 7021: A-4(1982)
	Thermal Shock	105 ± 5℃ ～ -55℃ ± 5℃ 10mins 10mins 10 Cycles	MIL-STD-202F:107D(1980) MIL-STD-750D:1051(1995) MIL-STD-883D:1011 (1991)
	Solder Resistance	T.sol = 260 ± 5℃ Dwell Time= 10 ± 1secs	MIL-STD-202F:210A(1980) MIL-STD-750D:2031(1995) JIS C 7021: A-1(1982)
	Solderability	T. sol = 230 ± 5℃ Dwell Time= 5 ± 1secs	MIL-STD-202F:208D(1980) MIL-STD-750D:2026(1995) MIL-STD-883D:2003(1991) JIS C 7021: A-2(1982)

9. Others

The appearance and specifications of the product may be modified for improvement, without prior notice.