Features

* Lead (Pb) free product – RoHS compliant
* Designed for ease in circuit board assembly.
* Black case enhance contrast ratio.
* Solid state light source.
* Reliable and rugged.

Package Dimensions

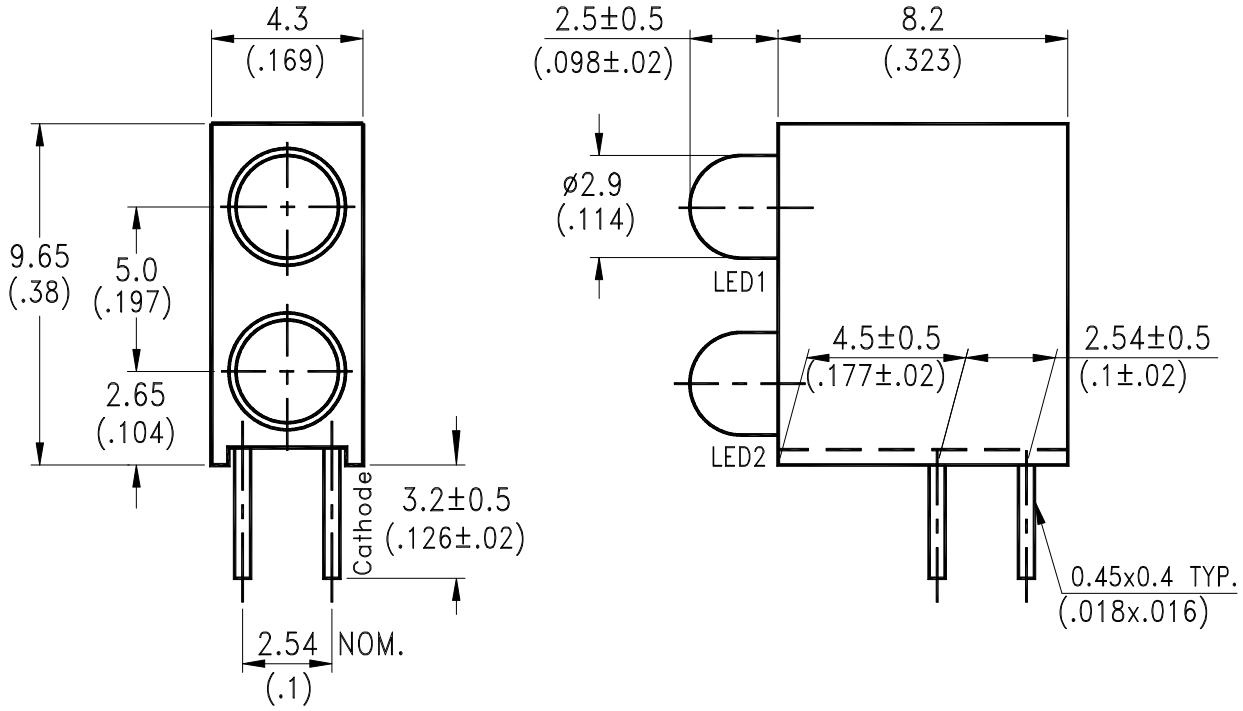

Part No.	Lens	Source Color
LTL-42M8NH106	Red Diffused / Green Diffused	Hi-Eff Red / Green

Notes:
1. All dimensions are in millimeters (inches).
2. Tolerance is ±0.25mm(.010") unless otherwise noted.
3. The holder color is black P/N 46L106
4. The LED1 lamp is LTL-4221N.(Red Diffused)
   The LED2 lamp is LTL-4231N.(Green Diffused)
5. Specifications are subject to change without notice.

Absolute Maximum Ratings at Ta=25℃

Parameter	Red	Green	Unit
Power Dissipation	100	100	mW
Peak Forward Current (1/10 Duty Cycle, 0.1ms Pulse Width)	90	120	mA
Continuous Forward Current	30	30	mA
Derating Linear From 50℃	0.4	0.4	mA/℃
Reverse Voltage	5	5	V
Operating Temperature Range	-40℃ to + 80℃		
Storage Temperature Range	-55℃ to + 100℃		
Lead Soldering Temperature [2.0mm(.078") From Body]	260℃ for 5 Seconds Max.		

Electrical Optical Characteristics at T_a=25℃

Parameter	Symbol	LTL-4221N LTL-4231N	Min.	Typ.	Max.	Unit	Test Condition
Luminous Intensity	I_V	Red Green	2.5 5.6	12.6 12.6	40 29	mcd	I_F = 10mA Note 1,4
Viewing Angle	$2\theta_{1/2}$	Red Green		60		deg	Note 2 (Fig.6)
Peak Emission Wavelength	λp	Red Green		635 565		nm	Measurement @Peak (Fig.1)
Dominant Wavelength	λd	Red Green	615 564	625 569	632 573	nm	Note 3
Spectral Line Half-Width	$\Delta\lambda$	Red Green		40 30		nm	
Forward Voltage	V_F	Red Green	1.5 1.5	2.0 2.1	2.6 2.6	V	I_F = 20mA
Reverse Current	I_R	Red Green			100	μA	V_R = 5V
Capacitance	C	Red Green		20 35		PF	V_F = 0 f = 1MHZ

Note: 1. Luminous intensity is measured with a light sensor and filter combination that approximates the CIE eye-response curve.

2. $\theta_{1/2}$ is the off-axis angle at which the luminous intensity is half the axial luminous intensity.

3. The dominant wavelength, λd is derived from the CIE chromaticity diagram and represents the single wavelength which defines the color of the device.

4. Iv needs ±15% additionary for guaranteed limits.

Typical Electrical / Optical Characteristics Curves

(25℃ Ambient Temperature Unless Otherwise Noted)

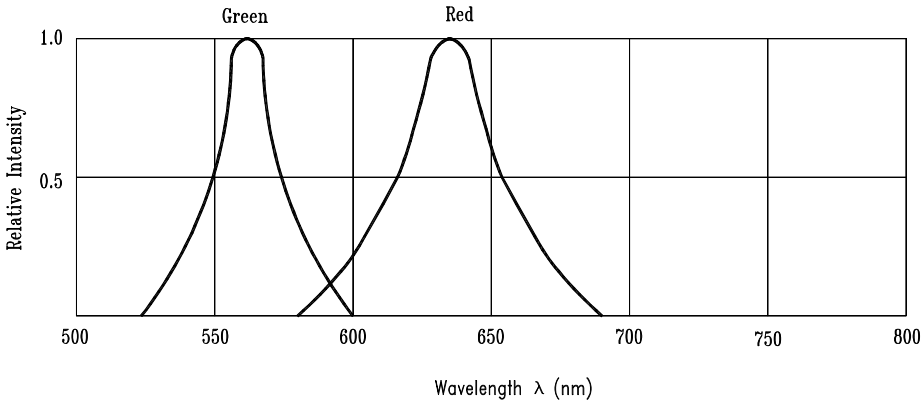

Fig.1 Relative Intensity vs. Wavelength

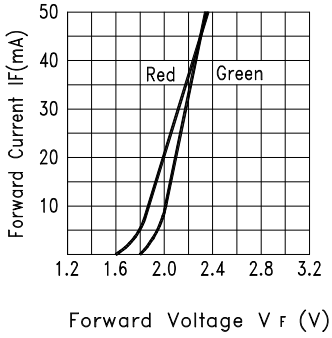

Fig.2 Forward Current vs. Forward Voltage

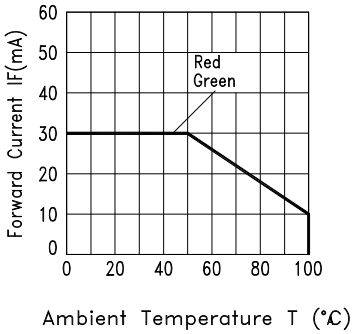

Fig.3 Forward Current Derating Curve

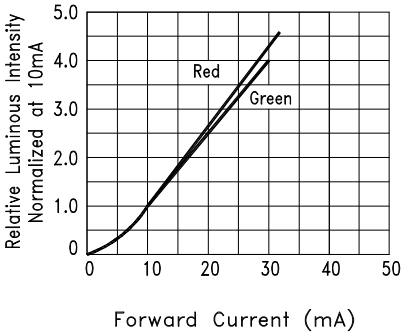

Fig.4 Relative Luminous Intensity vs. Forward Current

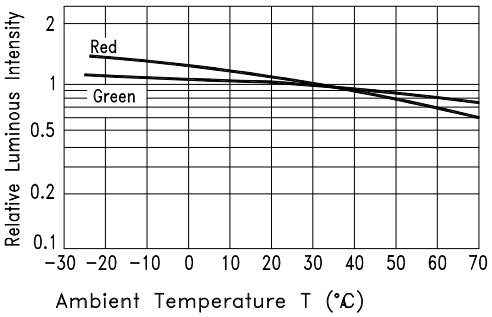

Fig.5 Luminous Intensity vs. Ambient Temperature

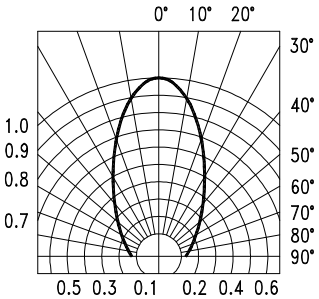

Fig.6 Spatial Distribution

Packing Spec

500 or 200’100 pcs per packing bag

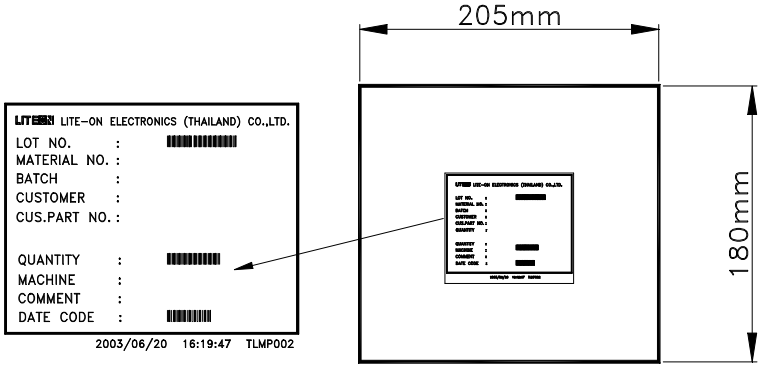

10 packing bags per inner carton
total 5,000 pcs per inner carton

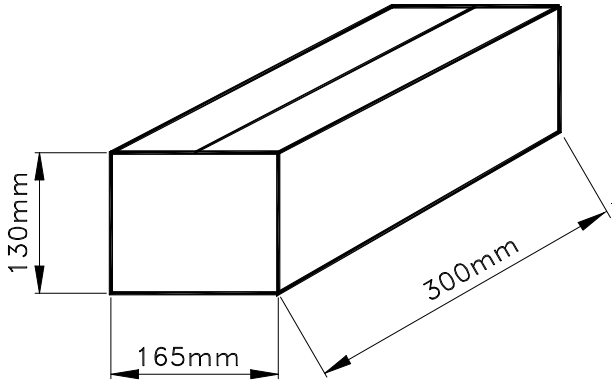

8 Inner cartons per outer carton
total 40,000 pcs per outer carton
In every shipping lot, only the last pack will be non-full packing

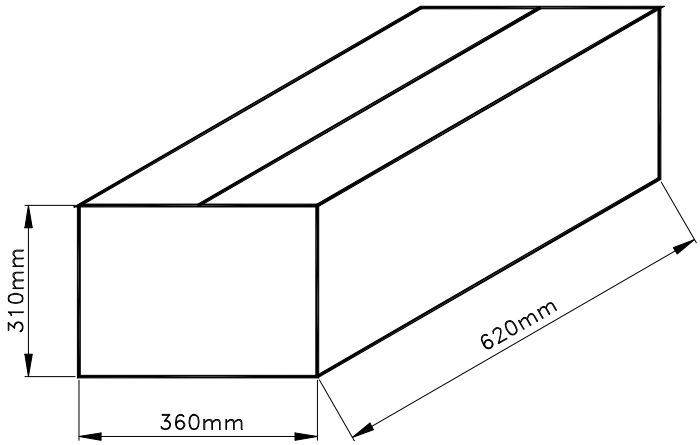

Bin Table Specification

Luminous Intensity (Red) Unit : mcd @10mA		
Bin Code	Min.	Max.
K5	2.5	3.7
K4	3.7	5.6
K3	5.6	8.7
K2	8.7	12.6
K1	12.6	19
L1	19	29
M1	29	40

Note: Tolerance of each bin limit is ±15%

Bin Table Specification

Luminous Intensity (Green) Unit : mcd @10mA		
Bin Code	Min.	Max.
L4	5.6	8.7
L3	8.7	12.6
L2	12.6	19
L1	19	29

Note: Tolerance of each bin limit is ±15%

Dominant Wavelength (Green) Unit : nm @10mA		
Bin Code	Min.	Max.
GG2	564.0	566.0
GG1	566.0	568.0
GG	568.0	569.5
PG	569.5	571.0
YG	571.0	573.0

Note: Tolerance of each bin limit is ±1nm

CAUTIONS

1. Application

The LEDs described here are intended to be used for ordinary electronic equipment (such as office equipment, communication equipment and household applications).Consult Liteon's Sales in advance for information on applications in which exceptional reliability is required, particularly when the failure or malfunction of the LEDs may directly jeopardize life or health (such as in aviation, transportation, traffic control equipment, medical and life support systems and safety devices).

2. Storage

The storage ambient for the LEDs should not exceed 30°C temperature or 70% relative humidity.
It is recommended that LEDs out of their original packaging are used within three months.

For extended storage out of their original packaging, it is recommended that the LEDs be stored in a sealed container with appropriate desiccant or in desiccators with nitrogen ambient.

3. Cleaning

Use alcohol-based cleaning solvents such as isopropyl alcohol to clean the LEDs if necessary.

4. Lead Forming & Assembly

During lead forming, the leads should be bent at a point at least 3mm from the base of LED lens.
Do not use the base of the lead frame as a fulcrum during forming.
Lead forming must be done before soldering, at normal temperature.
During assembly on PCB, use minimum clinch force possible to avoid excessive mechanical stress.

5. Soldering

When soldering, For Lamp without stopper type and must be leave a minimum of 3 mm clearance from the base of the lens to the soldering point.
To avoided the Epoxy climb up on lead frame and was impact to non-soldering problem, Dipping the lens into the solder must be avoided.
Do not apply any external stress to the lead frame during soldering while the LED is at high temperature.

Recommended soldering conditions :

Soldering iron		Wave soldering	
Temperature Soldering time	300°C Max. 3 sec. Max. (one time only)	Pre-heat Pre-heat time Solder wave Soldering time	100°C Max. 60 sec. Max. 260°C Max. 5 sec. Max.

Note: Excessive soldering temperature and/or time might result in deformation of the LED lens or catastrophic failure of the LED. IR reflow is not suitable process for through hole type LED lamp product.

6. Drive Method

An LED is a current-operated device. In order to ensure intensity uniformity on multiple LEDs connected in parallel in an application, it is recommended that a current limiting resistor be incorporated in the drive circuit, in series with each LED as shown in Circuit A below.

Circuit model A

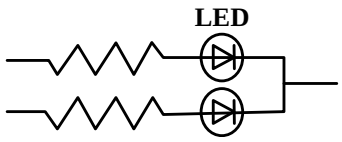

Circuit model B

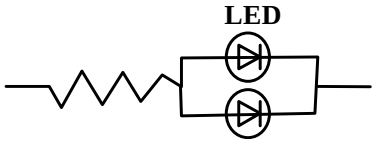

(A) Recommended circuit

(B) The brightness of each LED might appear different due to the differences in the I-V characteristics of those LEDs

7. ESD (Electrostatic Discharge)

Static Electricity or power surge will damage the LED.

Suggestions to prevent ESD damage:

- Use a conductive wrist band or anti- electrostatic glove when handling these LEDs
- All devices, equipment, and machinery must be properly grounded
- Work tables, storage racks, etc. should be properly grounded
- Use ion blower to neutralize the static charge which might have built up on surface of the LEDs plastic lens as a result of friction between LEDs during storage and handing

Suggested checking list :

Training and Certification

1. Everyone working in a static-safe area is ESD-certified?
2. Training records kept and re-certification dates monitored?

Static-Safe Workstation & Work Areas

1. Static-safe workstation or work-areas have ESD signs?
2. All surfaces and objects at all static-safe workstation and within 1 ft measure less than 100V?
3. All ionizer activated, positioned towards the units?
4. Each work surface mats grounding is good?

Personnel Grounding

1. Every person (including visitors) handling ESD sensitive (ESDS) items wear wrist strap, heel strap or conductive shoes with conductive flooring?
2. If conductive footwear used, conductive flooring also present where operator stand or walk?
3. Garments, hairs or anything closer than 1 ft to ESD items measure less than 100V*?
4. Every wrist strap or heel strap/conductive shoes checked daily and result recorded for all DLs?
5. All wrist strap or heel strap checkers calibration up to date?

Note: *50V for Blue LED.

Device Handling

1. Every ESDS items identified by EIA-471 labels on item or packaging?
2. All ESDS items completely inside properly closed static-shielding containers when not at static-safe workstation?
3. No static charge generators (e.g. plastics) inside shielding containers with ESDS items?
4. All flexible conductive and dissipative package materials inspected before reuse or recycle?

Others

1. Audit result reported to entity ESD control coordinator?
2. Corrective action from previous audits completed?
3. Are audit records complete and on file?

8. Reliability Test

Classification	Test Item	Test Condition	Reference Standard
Endurance Test	Operation Life	Ta= Under Room Temperature As Per Data Sheet Maximum Rating *Test Time= 1000HRS (-24HRS,+72HRS) *Test Current = 20mA Max.	MIL-STD-750D:1026 (1995) MIL-STD-883D:1005 (1991) JIS C 7021:B-1 (1982)
	High Temperature High Humidity Storage	Ta= 65±5°C RH= 90 ～ 95% Test Time= 240HRS±2HRS	MIL-STD-202F: 103B(1980) JIS C 7021 : B-11(1982)
	High Temperature Storage	Ta= 105±5°C *Test Time= 1000HRS (-24HRS,+72HRS)	MIL-STD-883D:1008 (1991) JIS C 7021:B-10 (1982)
	Low Temperature Storage	Ta= -55±5°C *Test Time=1000HRS (-24HRS,+72HRS)	JIS C 7021:B-12 (1982)
Environmental Test	Temperature Cycling	105°C ～ 25°C ～ -55°C ～ 25°C 30mins 5mins 30mins 5mins 10 Cycles	MIL-STD-202F:107D (1980) MIL-STD-750D:1051(1995) MIL-STD-883D:1010 (1991) JIS C 7021: A-4(1982)
	Thermal Shock	105 ± 5°C ～ -55°C ± 5°C 10mins 10mins 10 Cycles	MIL-STD-202F:107D(1980) MIL-STD-750D:1051(1995) MIL-STD-883D:1011 (1991)
	Solder Resistance	T.sol = 260 °C Max. Dwell Time= 5 secs Max.	MIL-STD-202F:210A(1980) MIL-STD-750D:2031(1995) JIS C 7021: A-1(1982)
	Solderability	T. sol = 230 ± 5°C Dwell Time= 5 ± 1secs	MIL-STD-202F:208D(1980) MIL-STD-750D:2026(1995) MIL-STD-883D:2003(1991) JIS C 7021: A-2(1982)

9. Others

The appearance and specifications of the product may be modified for improvement, without prior notice.