Features

* Low power consumption.
* Most suitable for use like level indicator.
* Excellent uniformity of light emittance.
* Long life solid state reliability.
* I.C. compatible.

Package Dimensions

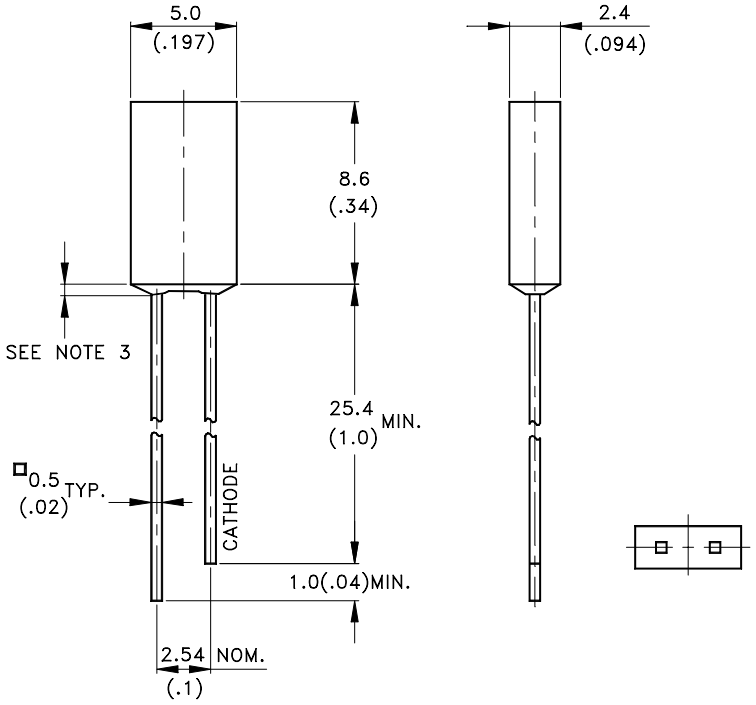

Part No.	Lens	Source Color
LTL-23231AL-D	Green Diffused	Green

Notes:

1. All dimensions are in millimeters (inches).
2. Tolerance is ±0.25mm(.010") unless otherwise noted.
3. Protruded resin under flange is 1.0mm(.04") max.
4. Lead spacing is measured where the leads emerge from the package.
5. Specifications are subject to change without notice.

Absolute Maximum Ratings at TA=25℃

Parameter	Maximum Rating	Unit
Power Dissipation	100	mW
Peak Forward Current (1/10 Duty Cycle, 0.1ms Pulse Width)	120	mA
Continuous Forward Current	30	mA
Derating Linear From 50℃	0.4	mA/℃
Reverse Voltage	5	V
Operating Temperature Range	-55℃ to + 100℃	
Storage Temperature Range	-55℃ to + 100℃	
Lead Soldering Temperature [1.6mm(.063") From Body]	260℃ for 5 Seconds	

Electrical / Optical Characteristics at T_A=25℃

Parameter	Symbol	Min.	Typ.	Max.	Unit	Test Condition
Luminous Intensity	I_V	1.1	3.7		mcd	I_F = 10mA Note 1,4
Viewing Angle	$2\theta_{1/2}$		140		deg	Note 2 (Fig.6)
Peak Emission Wavelength	λ_P		565		nm	Measurement @Peak (Fig.1)
Dominant Wavelength	λ_d		569		nm	Note 3
Spectral Line Half-Width	$\Delta\lambda$		30		nm	
Forward Voltage	V_F		2.1	2.6	V	I_F = 20mA
Reverse Current	I_R			100	μA	V_R = 5V
Capacitance	C		35		pF	V_F = 0 , f = 1MHz

Note: 1. Luminous intensity is measured with a light sensor and filter combination that approximates the CIE (Commission International De L'Eclairage) eye-response curve.

2. $\theta_{1/2}$ is the off-axis angle at which the luminous intensity is half the axial luminous intensity.

3. The dominant wavelength, λ_d is derived from the CIE chromaticity diagram and represents the single wavelength which defines the color of the device.

4. The Iv guarantee should be added ±15% .

Typical Electrical / Optical Characteristics Curves

(25℃ Ambient Temperature Unless Otherwise Noted)

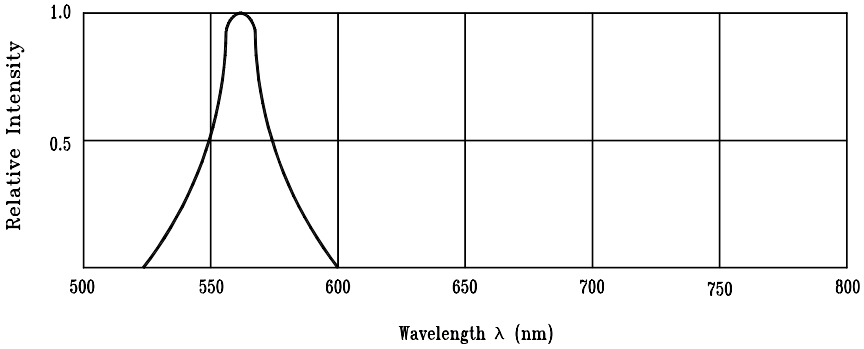

Fig.1 Relative Intensity vs. Wavelength

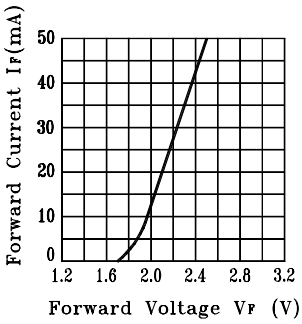

Fig.2 Forward Current vs. Forward Voltage

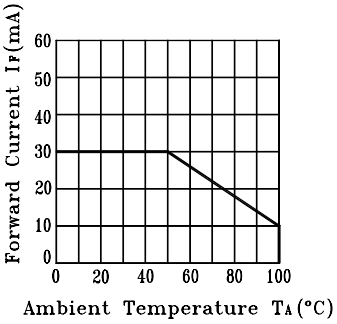

Fig.3 Forward Current Derating Curve

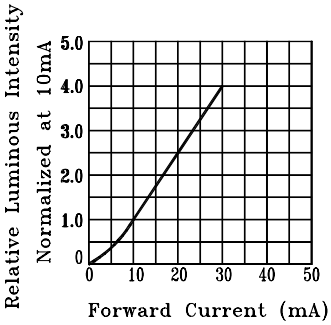

Fig.4 Relative Luminous Intensity vs. Forward Current

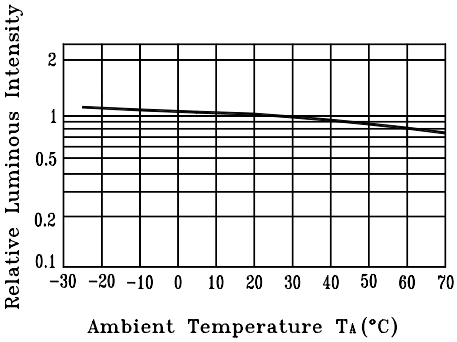

Fig.5 Luminous Intensity vs. Ambient Temperature

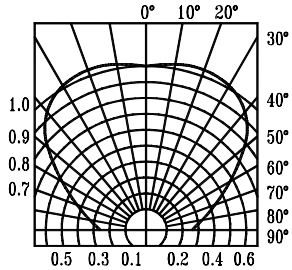

Fig.6 Spatial Distribution

Features

* Compatible with radial lead automatic insertion equipment.
* Most radial lead plastic lead lamps available packaged in tape and reel.
* 2.54mm (0.1") straight lead spacing available.
* Reel packaging simplifies handling and testing.

Package Dimensions

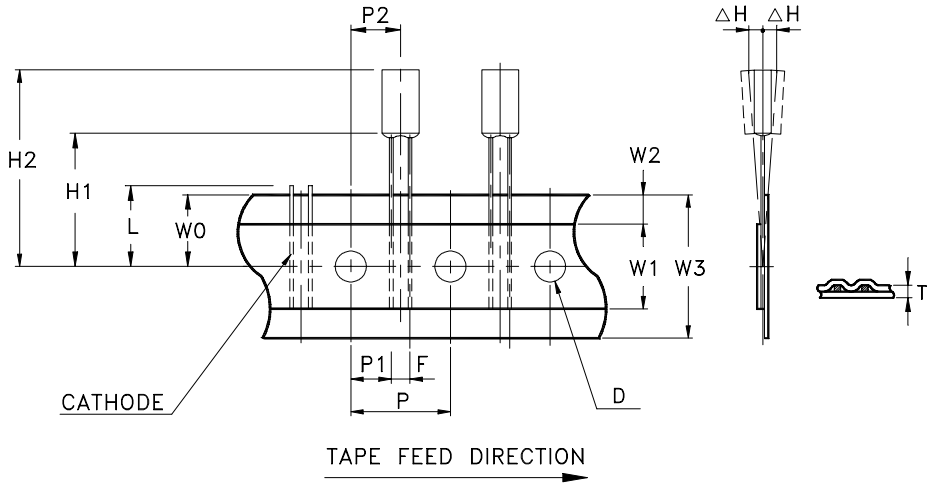

Item	Symbol	Specification			
		Minimum		Maximum	
		mm	inch	mm	inch
Tape Feed Hole Diameter	D	3.8	0.149	4.2	0.165
Component Lead Pitch	F	2.3	0.091	3.0	0.118
Front to Rear Deflection	△H	--	--	2.0	0.078
Feed Hole to Bottom of Component	H1	17.5	0.688	18.5	0.728
Feed Hole to Overall Component Height	H2	25.9	1.020	27.3	1.074
Lead Length After Component Height	L	W0		11.0	0.433
Feed Hole Pitch	P	12.4	0.488	13.0	0.511
Lead Location	P1	4.4	0.173	5.8	0.228
Center of Component Location	P2	5.05	0.198	7.65	0.301
Total Tape Thickness	T	--	--	0.90	0.035
Feed Hole Location	W0	8.5	0.334	9.75	0.384
Adhesive Tape Width	W1	12.5	0.492	13.5	0.531
Adhesive Tape Position	W2	0	0	3.0	0.118
Tape Width	W3	17.5	0.689	19.0	0.748