FEATURES

∗0.54 INCH (13.8 mm) DIGIT HEIGHT.
∗CONTINUOUS UNIFORM SEGMENTS
∗LOW POWER REQUIREMENT.
∗EXCELLENT CHARACTERS APPEARANCE.
∗HIGH BRIGHTNESS & HIGH CONTRAST.
∗WIDE VIEWING ANGLE.
∗SOLID STATE RELIABILITY.
∗CATEGORIZED FOR LUMINOUS INTENSITY.

DESCRIPTION

The LTP-3784E is a 0.54 inch (13.8 mm) digit height dual digit 14-segment alphanumeric display. This device utilizes bright red LED chips, which are made from GaP on a transparent GaP substrate, and has a gray face and white segments.

DEVICE

PART NO.	DESCRIPTION
BRIGHT RED	Dual Common Cathode
LTP-3784E	Rt. Hand Decimal

PACKAGE DIMENSIONS

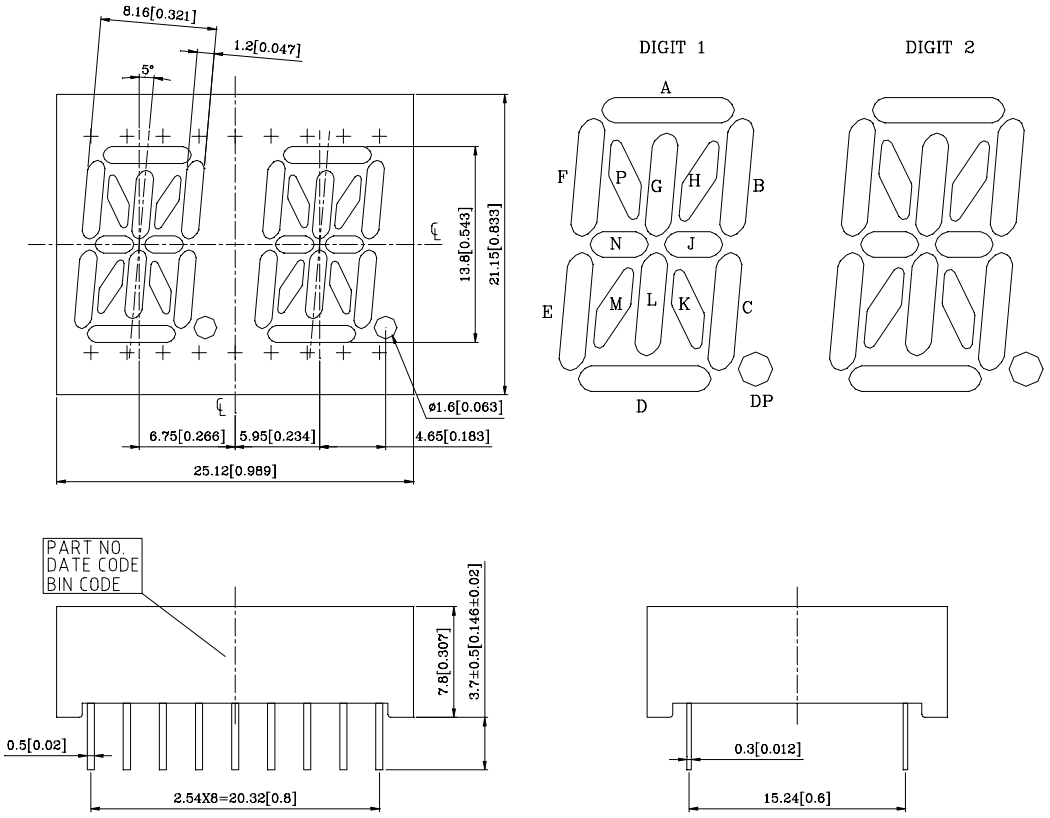

NOTES: All dimensions are in millimeters. Tolerances are ± 0.25-mm (0.01“) unless otherwise noted.

INTERNAL CIRCUIT DIAGRAM

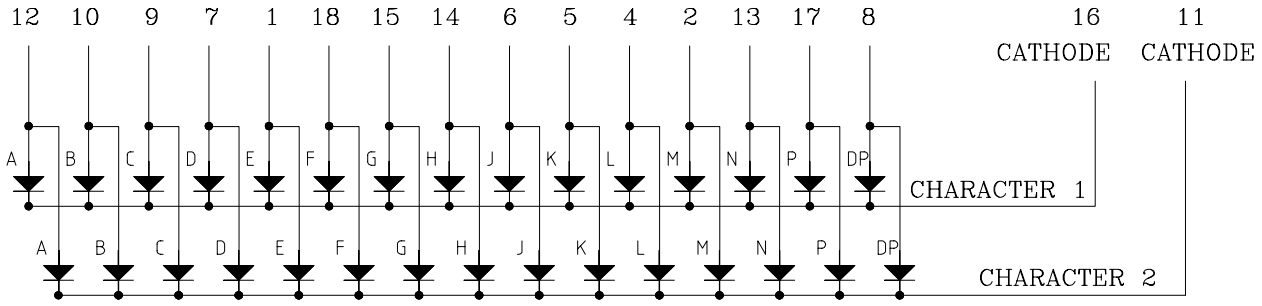

PIN CONNECTION

No.	CONNECTION
1	ANODE E
2	ANODE M
3	NO CONNECTION
4	ANODE L
5	ANODE K
6	ANODE J
7	ANODE D
8	ANODE D.P.
9	ANODE C
10	ANODE B
11	COMMON CATHODE , CHARACTER 2
12	ANODE A
13	ANODE N
14	ANODE H
15	ANODE G
16	COMMON CATHODE , CHARACTER 1
17	ANODE P
18	ANODE F

ABSOLUTE MAXIMUM RATING AT T_A=25°C

PARAMETER	MAXIMUM RATING	UNIT
Power Dissipation Per Segment	40	mW
Peak Forward Current Per Segment (1/10 Duty Cycle, 1.0ms Pulse Width)	60	mA
Continuous Forward Current Per Segment Derating Linear From 25°C Per Segment	15 0.2	mA mA/°C
Reverse Voltage Per Segment	5	V
Operating Temperature Range	-35°C to +85°C	
Storage Temperature Range	-35°C to +85°C	
Solder Temperature: max 260℃ for max 3sec at 1.6mm[1/16inch] below seating plane.		

ELECTRICAL / OPTICAL CHARACTERISTICS AT T_A=25°C

PARAMETER	SYMBOL	MIN.	TYP.	MAX.	UNIT	TEST CONDITION
Average Luminous Intensity	I_V	320	900		μcd	I_F=10mA
Peak Emission Wavelength	λp		697		nm	I_F=20mA
Spectral Line Half-Width	Δλ		90		nm	I_F=20mA
Dominant Wavelength	λd		657		nm	I_F=20mA
Forward Voltage Per Segment	V_F		2.0	2.6	V	I_F=20mA
Reverse Current Per Segment	I_R			100	μA	V_R=5V
Luminous Intensity Matching Ratio	I_V-m			2:1		I_F=10mA

Note: Luminous intensity is measured with a light sensor and filter combination that approximates the CIE (Commision Internationale De L'Eclairage) eye-response curve.

TYPICAL ELECTRICAL / OPTICAL CHARACTERISTIC CURVES

(25°C Ambient Temperature Unless Otherwise Noted)

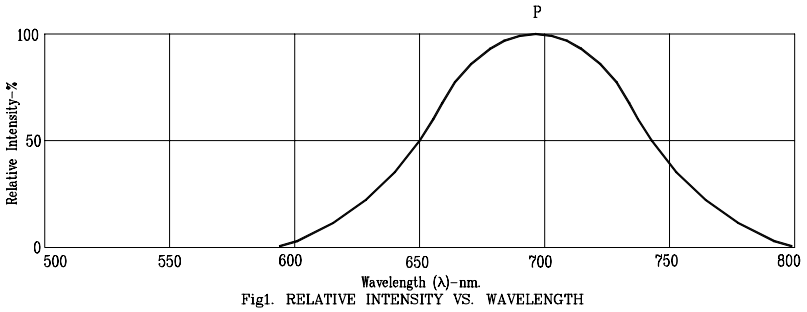

Fig1. RELATIVE INTENSITY VS. WAVELENGTH

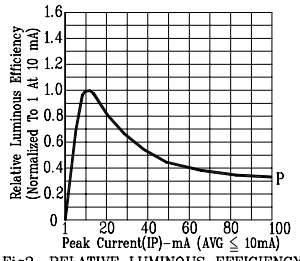

Fig2. RELATIVE LUMINOUS EFFICIENCY (LUMINOUS INTENSITY PER UNIT CURRENT) VS. PEAK CURRENT (REFRESH RATE 1KHz)

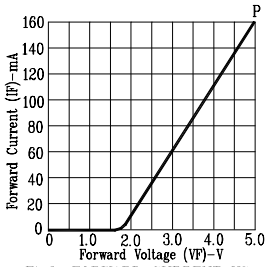

Fig3. FORWARD CURRENT VS. FORWARD VOLTAGE

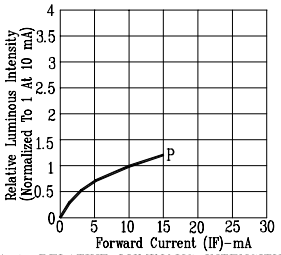

Fig4. RELATIVE LUMINOUS INTENSITY VS. FORWARD CURRENT

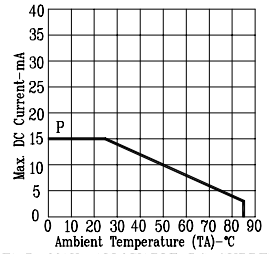

Fig5. MAX. ALLOWABLE DC CURRENT VS. AMBIENT TEMPERATURE.

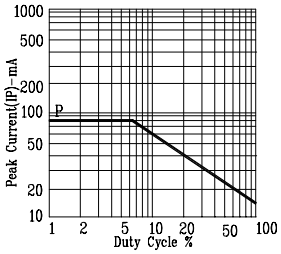

Fig6. MAX. PEAK CURRENT VS. DUTY CYCLE % (REFRESH RATE 1KHz)

NOTE: P=BRIGHT RED