## Features

* High Luminous intensity output.
* Low power consumption.
* High efficiency.
* Wide Viewing Angle
  Major Axis 100° / Minor Axis 50°
* Versatile mounting on P.C. board or panel.
* I.C. Compatible/low current requirements.

## Package Dimensions

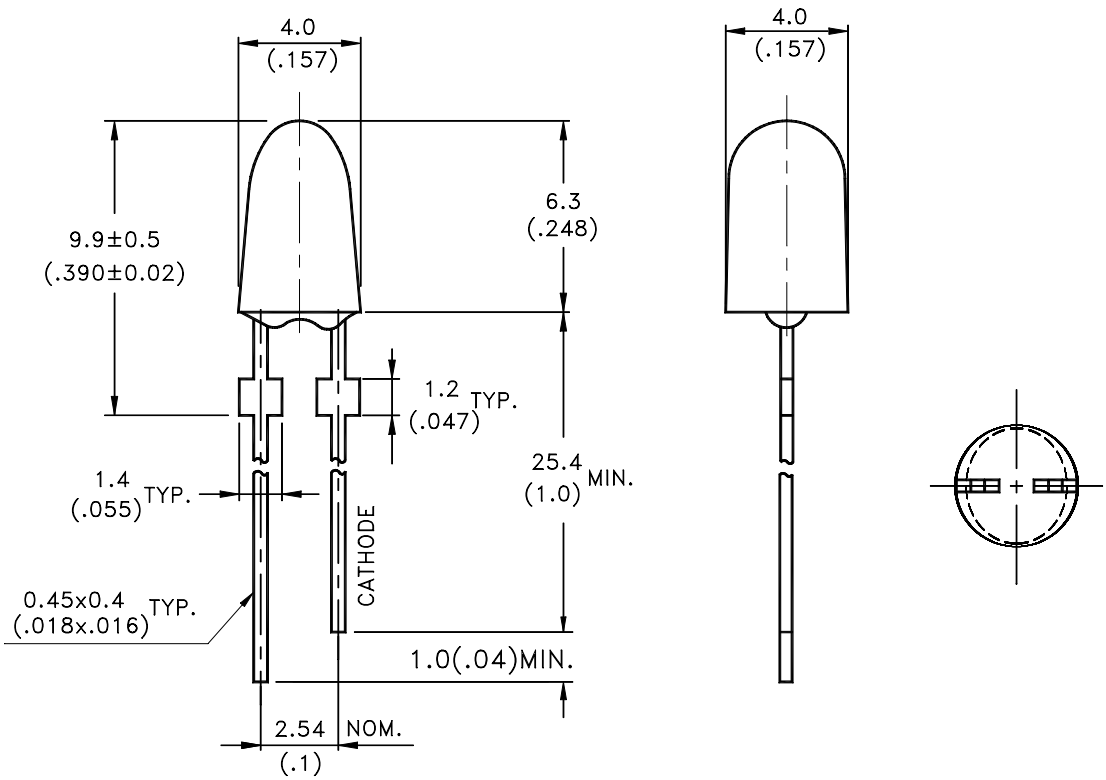


| Part No. | Lens | Source Color |
|---|---|---|
| LTL4VM8EDS-012 | Red Diffused | AlInGaP Red |

Notes:

1. All dimensions are in millimeters (inches).
2. Tolerance is ±0.25mm(.010") unless otherwise noted.
3. Lead spacing is measured where the leads emerge from the package.
4. Specifications are subject to change without notice.

## Absolute Maximum Ratings at $T_A$=25℃

| Parameter | Maximum Rating | Unit |
|---|---|---|
| Power Dissipation | 120 | mW |
| Peak Forward Current<br>(1/10 Duty Cycle, 0.1ms Pulse Width) | 130 | mA |
| DC Forward Current | 50 | mA |
| Derating Linear From 40℃ | 0.75 | mA/℃ |
| Reverse Voltage | 5 | V |
| Operating Temperature Range | -40℃ to + 80℃ | |
| Storage Temperature Range | -55℃ to + 100℃ | |
| Lead Soldering Temperature<br>[1.6mm(.063") From Body] | 260℃ for 5 Seconds | |

## Electrical / Optical Characteristics at $T_A$=25℃

| Parameter | Symbol | | Min. | Typ. | Max. | Unit | Test Condition |
|---|---|---|---|---|---|---|---|
| Luminous Intensity | $I_V$ | K | 310 | | 400 | mcd | $I_F$ = 20mA Note 1 |
| | | L | 400 | | 520 | | |
| Viewing Angle | $2\theta_{1/2}$ | | | 100 / 50 | | deg | Note 2 (Fig.5) |
| Peak Emission Wavelength | $\lambda_P$ | | | 632 | | nm | Measurement @Peak (Fig.1) |
| Dominant Wavelength | $\lambda_d$ | | | 624 | | nm | Note 4 |
| Spectral Line Half-Width | $\Delta\lambda$ | | | 20 | | nm | |
| Forward Voltage | $V_F$ | | | 2.0 | 2.4 | V | $I_F$ = 20mA |
| Reverse Current | $I_R$ | | | | 100 | μA | $V_R$ = 5V |
| Capacitance | C | | | 40 | | pF | $V_F$ = 0 , f = 1MHz |

NOTE: 1. Luminous intensity is measured with a light sensor and filter combination that approximates the CIE eye-response curve.

2. $\theta_{1/2}$ is the off-axis angle at which the luminous intensity is half the axial luminous intensity.

3. Iv classification code is marked on each packing bag.

4. The dominant wavelength, λd is derived from the CIE chromaticity diagram and represents the single wavelength which defines the color of the device.

## Typical Electrical / Optical Characteristics Curves

(25℃ Ambient Temperature Unless Otherwise Noted)

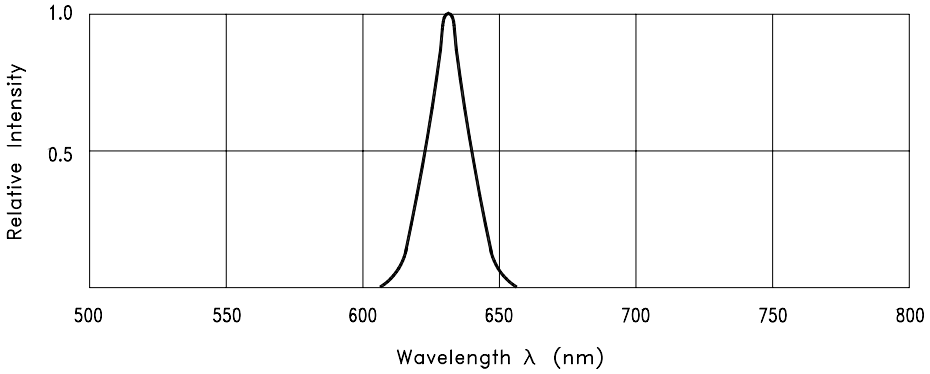


Fig.1 Relative Intensity vs. Wavelength

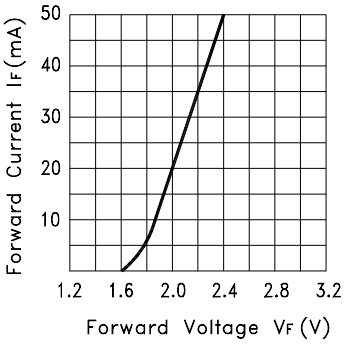


Fig.2 Forward Current vs. Forward Voltage

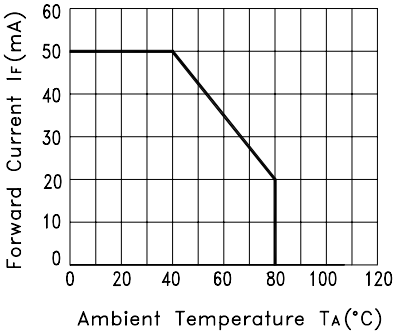


Fig.3 Forward Current Derating Curve

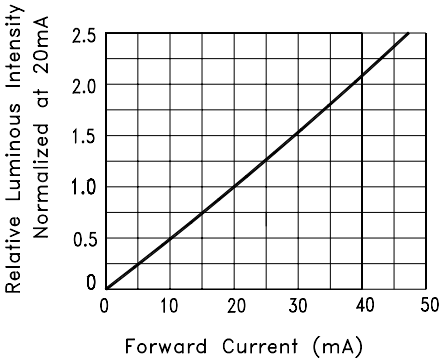


Fig.4 Relative Luminous Intensity vs. Forward Current

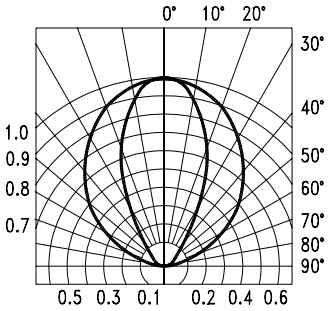


Fig.5 Spatial Distribution

## Features

* Compatible with radial lead automatic insertion equipment.
* Most radial lead plastic lead lamps available packaged in tape and reel.
* 2.54mm (0.1") straight lead spacing available.
* Reel packaging simplifies handling and testing.
  Folding packaging is available by adding suffix “A” on option.

## Package Dimensions

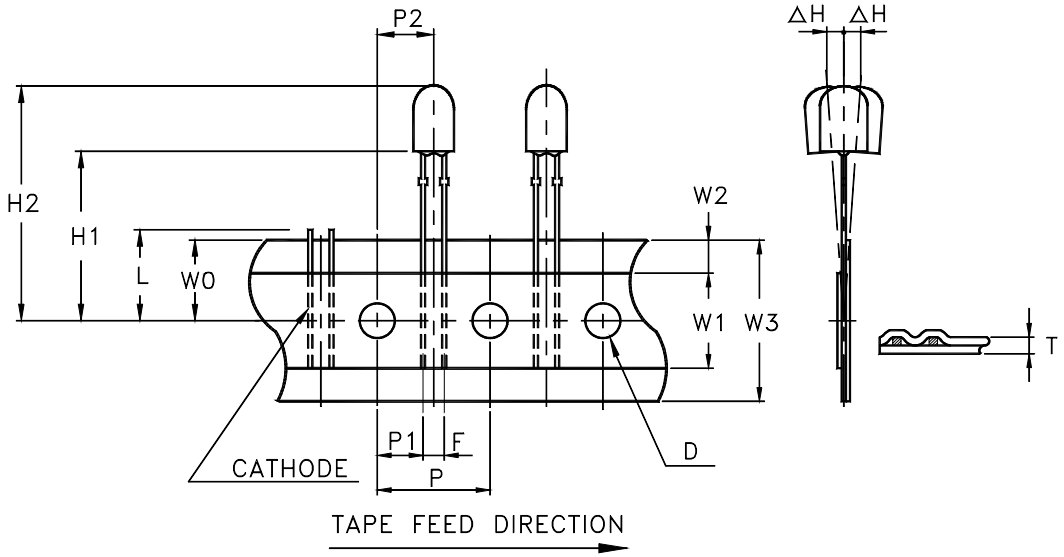


| Item | Symbol | Specification | | | |
|---|---|---|---|---|---|
| | | Minimum | | Maximum | |
| | | mm | inch | mm | inch |
| Tape Feed Hole Diameter | D | 3.8 | 0.149 | 4.2 | 0.165 |
| Component Lead Pitch | F | 2.3 | 0.091 | 3.0 | 0.118 |
| Front to Rear Deflection | △H | -- | -- | 2.0 | 0.079 |
| Feed Hole to Bottom of Component | H1 | 21.5 | 0.846 | 22.5 | 0.886 |
| Feed Hole to Overall Component Height | H2 | 27.5 | 1.082 | 29.1 | 1.145 |
| Lead Length After Component Height | L | W0 | | 11.0 | 0.433 |
| Feed Hole Pitch | P | 12.4 | 0.488 | 13.0 | 0.511 |
| Lead Location | P1 | 4.4 | 0.173 | 5.8 | 0.228 |
| Center of Component Location | P2 | 5.05 | 0.199 | 7.65 | 0.301 |
| Total Tape Thickness | T | -- | -- | 0.90 | 0.035 |
| Feed Hole Location | W0 | 8.5 | 0.334 | 9.75 | 0.384 |
| Adhesive Tape Width | W1 | 14.5 | 0.571 | 15.5 | 0.610 |
| Adhesive Tape Position | W2 | 0 | 0 | 3.0 | 0.118 |
| Tape Width | W3 | 17.5 | 0.689 | 19.0 | 0.748 |

# Packing Spec

**2 reel per inner carton**
**total 3000pcs per inner carton**

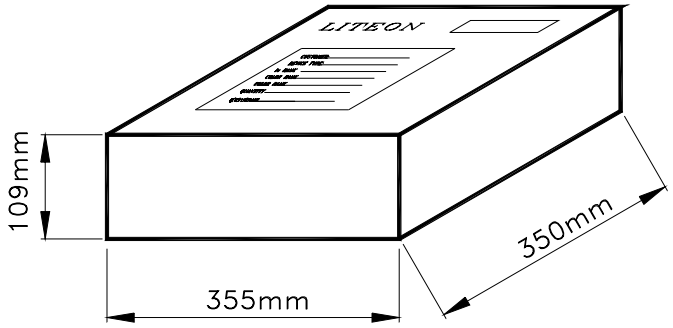


Tolerance: ±5mm

**6 Inner cartons per outer carton**
**total 18000 pcs per outer carton**
**In every shipping lot, only the last pack will be non-full packing**

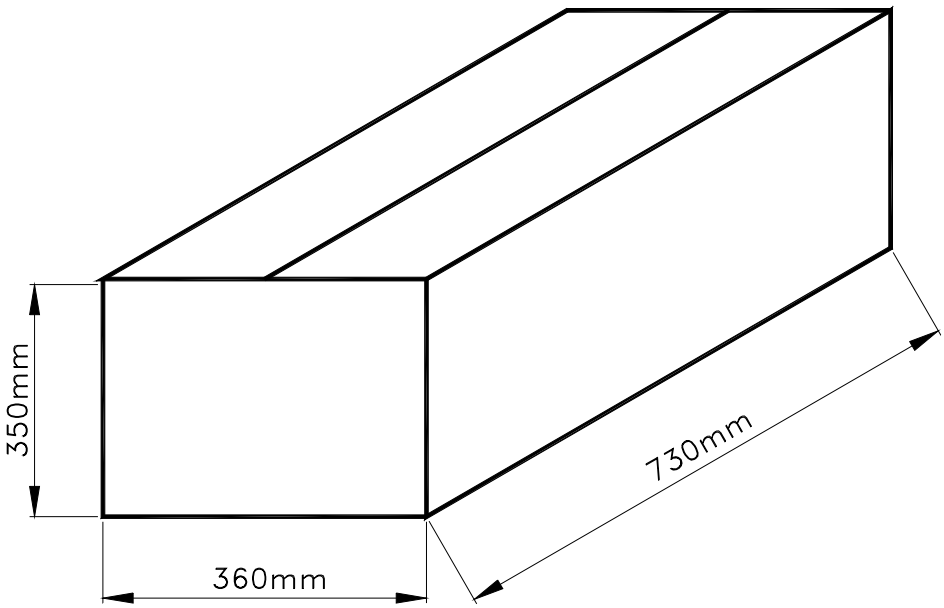

# CAUTIONS

## 1. Application

The LEDs described here are intended to be used for ordinary electronic equipment (such as office equipment, communication equipment and household applications).Consult Liteon's Sales in advance for information on applications in which exceptional reliability is required, particularly when the failure or malfunction of the LEDs may directly jeopardize life or health (such as in aviation, transportation, traffic control equipment, medical and life support systems and safety devices).

## 2. Storage

The storage ambient for the LEDs should not exceed 30°C temperature or 70% relative humidity.
It is recommended that LEDs out of their original packaging are used within three months.
For extended storage out of their original packaging, it is recommended that the LEDs be stored in a sealed container with appropriate desiccant or in desiccators with nitrogen ambient.

## 3. Cleaning

Use alcohol-based cleaning solvents such as isopropyl alcohol to clean the LEDs if necessary.

## 4. Lead Forming & Assembly

During lead forming, the leads should be bent at a point at least 3mm from the base of LED lens.

Do not use the base of the lead frame as a fulcrum during forming.

Lead forming must be done before soldering, at normal temperature.

During assembly on PCB, use minimum clinch force possible to avoid excessive mechanical stress.

## 5. Soldering

When soldering, leave a minimum of 2mm clearance from the base of the lens to the soldering point.
Dipping the lens into the solder must be avoided.
Do not apply any external stress to the lead frame during soldering while the LED is at high temperature.

Recommended soldering conditions :

| Soldering iron | | Wave soldering | |
|---|---|---|---|
| Temperature<br>Soldering time | 300°C Max.<br>3 sec. Max.<br>(one time only) | Pre-heat<br>Pre-heat time<br>Solder wave<br>Soldering time | 100°C Max.<br>60 sec. Max.<br>260°C Max.<br>10 sec. Max. |

Note: Excessive soldering temperature and/or time might result in deformation of the LED lens or catastrophic failure of the LED. IR reflow is not suitable process for through hole type LED lamp product.

## 6. Drive Method

An LED is a current-operated device. In order to ensure intensity uniformity on multiple LEDs connected in parallel in an application, it is recommended that a current limiting resistor be incorporated in the drive circuit, in series with each LED as shown in Circuit A below.

**Circuit model A**

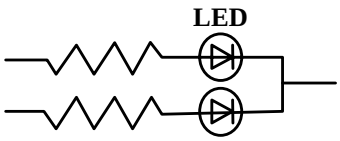


**Circuit model B**

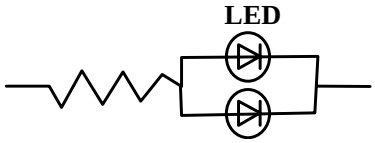


(A) Recommended circuit

(B) The brightness of each LED might appear different due to the differences in the I-V characteristics of those LEDs

## 7. ESD (Electrostatic Discharge)

Static Electricity or power surge will damage the LED.

Suggestions to prevent ESD damage:

- Use a conductive wrist band or anti- electrostatic glove when handling these LEDs
- All devices, equipment, and machinery must be properly grounded
- Work tables, storage racks, etc. should be properly grounded
- Use ion blower to neutralize the static charge which might have built up on surface of the LEDs plastic lens as a result of friction between LEDs during storage and handing

Suggested checking list :

Training and Certification

1. Everyone working in a static-safe area is ESD-certified?
2. Training records kept and re-certification dates monitored?

Static-Safe Workstation & Work Areas

1. Static-safe workstation or work-areas have ESD signs?
2. All surfaces and objects at all static-safe workstation and within 1 ft measure less than 100V?
3. All ionizer activated, positioned towards the units?
4. Each work surface mats grounding is good?

Personnel Grounding

1. Every person (including visitors) handling ESD sensitive (ESDS) items wear wrist strap, heel strap or conductive shoes with conductive flooring?
2. If conductive footwear used, conductive flooring also present where operator stand or walk?
3. Garments, hairs or anything closer than 1 ft to ESD items measure less than 100V*?
4. Every wrist strap or heel strap/conductive shoes checked daily and result recorded for all DLs?
5. All wrist strap or heel strap checkers calibration up to date?
   Note: *50V for Blue LED.

Device Handling

1. Every ESDS items identified by EIA-471 labels on item or packaging?
2. All ESDS items completely inside properly closed static-shielding containers when not at static-safe workstation?
3. No static charge generators (e.g. plastics) inside shielding containers with ESDS items?
4. All flexible conductive and dissipative package materials inspected before reuse or recycle?

Others

1. Audit result reported to entity ESD control coordinator?
2. Corrective action from previous audits completed?
3. Are audit records complete and on file?

## 8. Reliability Test

| Classification | Test Item | Test Condition | Reference Standard |
|---|---|---|---|
| Endurance Test | Operation Life | Ta= Under Room Temperature As Per Data Sheet Maximum Rating<br>*Test Time= 1000HRS (-24HRS,+72HRS) | MIL-STD-750D:1026 (1995)<br>MIL-STD-883D:1005 (1991)<br>JIS C 7021:B-1 (1982) |
| | High Temperature High Humidity Storage | Ta= 65±5℃<br>RH= 90 ～ 95%<br>Test Time= 240HRS±2HRS | MIL-STD-202F: 103B(1980)<br>JIS C 7021 : B-11(1982) |
| | High Temperature High Humidity Reverse BIAS | Ta= 65±5℃<br>RH= 90 ～ 95%<br>VR=5V<br>Test Time = 500HRS (-24HRS, +48HRS) | JIS C 7021 : B-11(1982) |
| | High Temperature Storage | Ta= 105±5℃<br>*Test Time= 1000HRS (-24HRS,+72HRS) | MIL-STD-883D:1008 (1991)<br>JIS C 7021:B-10 (1982) |
| | Low Temperature Storage | Ta= -55±5℃<br>*Test Time=1000HRS (-24HRS,+72HRS) | JIS C 7021:B-12 (1982) |
| Environmental Test | Temperature Cycling | 105℃ ～ 25℃ ～ -55℃ ～ 25℃<br>30mins 5mins 30mins 5mins<br>10 Cycles | MIL-STD-202F:107D (1980)<br>MIL-STD-750D:1051(1995)<br>MIL-STD-883D:1010 (1991)<br>JIS C 7021: A-4(1982) |
| | Thermal Shock | 105 ± 5℃ ～ -55℃ ± 5℃<br>10mins 10mins<br>10 Cycles | MIL-STD-202F:107D(1980)<br>MIL-STD-750D:1051(1995)<br>MIL-STD-883D:1011 (1991) |
| | Solder Resistance | T.sol = 260 ± 5℃<br>Dwell Time= 10 ± 1secs | MIL-STD-202F:210A(1980)<br>MIL-STD-750D:2031(1995)<br>JIS C 7021: A-1(1982) |
| | Solderability | T. sol = 230 ± 5℃<br>Dwell Time= 5 ± 1secs | MIL-STD-202F:208D(1980)<br>MIL-STD-750D:2026(1995)<br>MIL-STD-883D:2003(1991)<br>JIS C 7021: A-2(1982) |

## 9. Others

The appearance and specifications of the product may be modified for improvement, without prior notice.