LITE-ON TECHNOLOGY CORPORATION

Property of Lite-On Only

Features

* Lead (Pb) free product – RoHS compliant.
* Low power consumption.
* High efficiency.
* Versatile mounting on p.c. board or panel.
* I.C. compatible/low current requirement.
* Popular T-1 3/4 diameter.

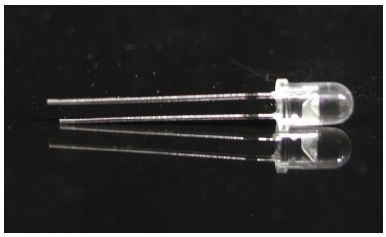

Package Dimensions

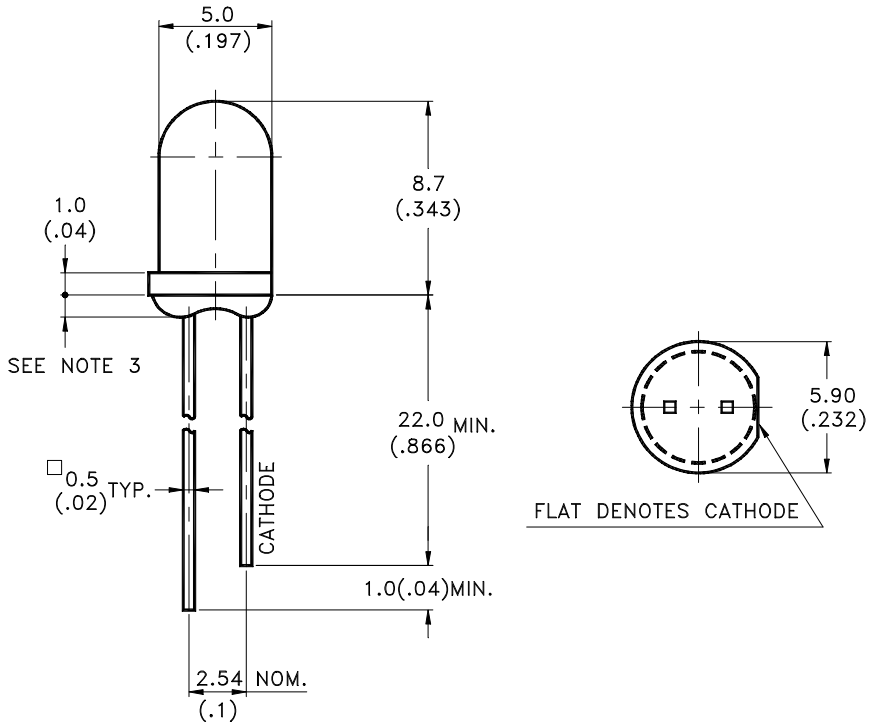

Part No.	Lens Color	Emitted Color
LTW-2R3D7	Water Clear	InGaN White

NOTES:

1. All dimensions are in millimeters (inches).
2. Tolerance is ±0.25mm(.010") unless otherwise noted.
3. Protruded resin under flange is 1.0mm(.04") max.
4. Lead spacing is measured where the leads emerge from the package.
5. Specifications are subject to change without notice.

Absolute Maximum Ratings at T_a=25℃

PARAMETER	MAXIMUM RATING	UNIT
Power Dissipation	114	mW
Peak Forward Current (1/10 Duty Cycle, 0.1ms Pulse Width)	100	mA
DC Forward Current	30	mA
Operating Temperature Range	-25℃ to + 80℃	
Storage Temperature Range	-30℃ to + 100℃	
Lead Soldering Temperature [1.6mm(.063") From Body]	260℃ for 5 Seconds	

Electrical / Optical Characteristics at Ta=25℃

PARAMETER	SYMBOL	MIN.	TYP.	MAX.	UNIT	TEST CONDITION
Luminous Intensity	Iv	2500	4200		mcd	I_F = 20mA Note 1,2,3 Iv Spec. Table
Viewing Angle	$2\theta_{1/2}$		35		deg	Note 4
Chromaticity Coordinates	x		0.30			I_F = 20mA Note 5 Hue Spec. Table & Chromaticity Diagram
	y		0.30			
Forward Voltage	V_F		3.4	3.8	V	I_F = 20mA
Reverse Current	I_R			50	μA	V_R = 5V

NOTE: 1. Luminous intensity is measured with a light sensor and filter combination that approximates the CIE eye-response curve.

2. The Iv guarantee should be added ±15% tolerance.
3. Iv classification code is marked on each packing bag.
4. $\theta_{1/2}$ is the off-axis angle at which the luminous intensity is half the axial luminous intensity.
5. The chromaticity coordinates (x, y) is derived from the 1931 CIE chromaticity diagram.
6. Precautions in handling:
   - When soldering, leave 2mm of minimum clearance from the resin to the soldering point.
   - Dipping the resin to solder must be avoided.
   - Correcting the soldered position after soldering must be avoided.
   - In soldering, do not apply any stress to the lead frame particularly when heated.
   - Lead forming must be done before soldering.
   - It is necessary to cut the lead frame at normal temperature.
7. Caution in ESD:

   Static Electricity and surge damages the LED. It is recommend to use a wrist band or anti-electrostatic glove when handling the LED. All devices, equipment and machinery must be properly grounded.
8. Reverse voltage (V_R) condition is applied for IR test only. The device is not designed for reverse operation.

Typical Electrical / Optical Characteristics Curves

(25℃ Ambient Temperature Unless Otherwise Noted)

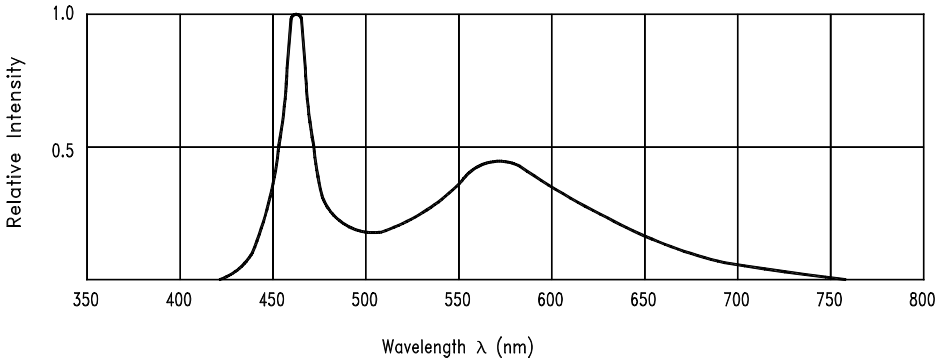

Fig.1 Relative Intensity vs. Wavelength

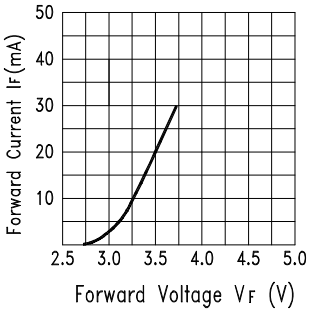

Fig.2 Forward Current vs. Forward Voltage

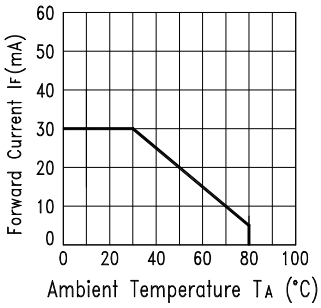

Fig.3 Forward Current Derating Curve

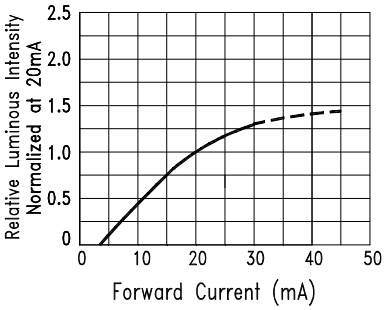

Fig.4 Relative Luminous Intensity vs. Forward Current

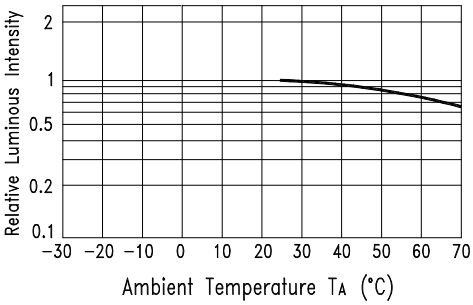

Fig.5 Luminous Intensity vs. Ambient Temperature

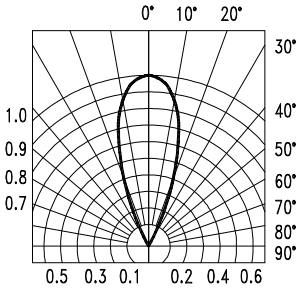

Fig.6 Spatial Distribution

Packing Spec

480, 240, 120 or 60 pcs per packing bag

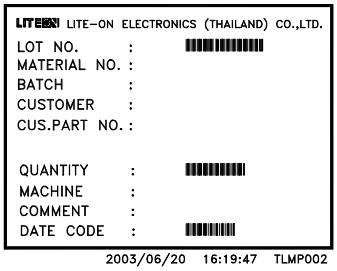

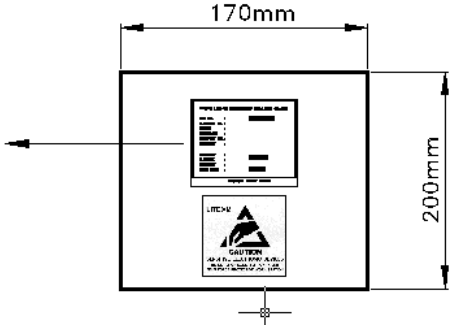

10 packing bags per inner carton
Total 4,800 pcs per inner carton

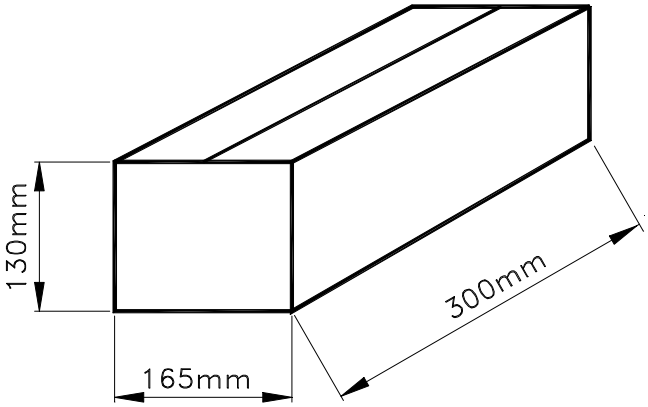

8 Inner cartons per outer carton
Total 38,400 pcs per outer carton

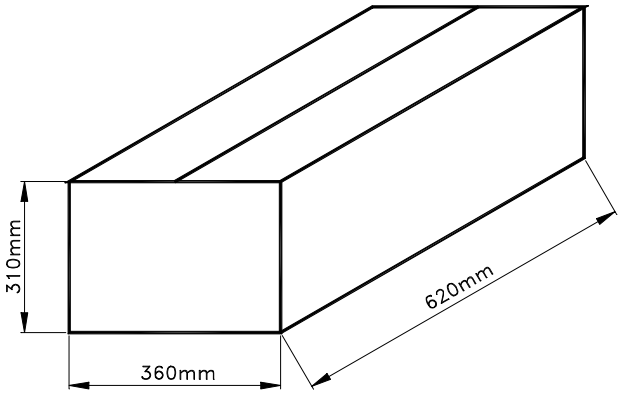

Iv Spec. Table for Reference

Iv Bin	Luminous Intensity (mcd) , If = 20mA	
	min.	max.
T	2500	3200
U	3200	4200
V	4200	5500
W	5500	7200
Luminous Intensity Measurement allowance is 15%		

Vf Spec. Table for Reference

Vf Bin	Forward Voltage (V) , If = 20mA	
	min.	max.
3E	3.00	3.20
4E	3.20	3.40
5E	3.40	3.60
6E	3.60	3.80
Forward Voltage Measurement allowance is ±0.1		

Hue Spec. Table for Reference

Hue Bin	Chromaticity Coordinates				
60	x	0.306	0.306	0.285	0.285
	y	0.369	0.269	0.244	0.344
70	x	0.285	0.285	0.250	0.250
	y	0.344	0.244	0.200	0.300
80	x	0.250	0.250	0.210	0.210
	y	0.300	0.200	0.150	0.250
Color Coordinates Measurement allowance is ±0.01					

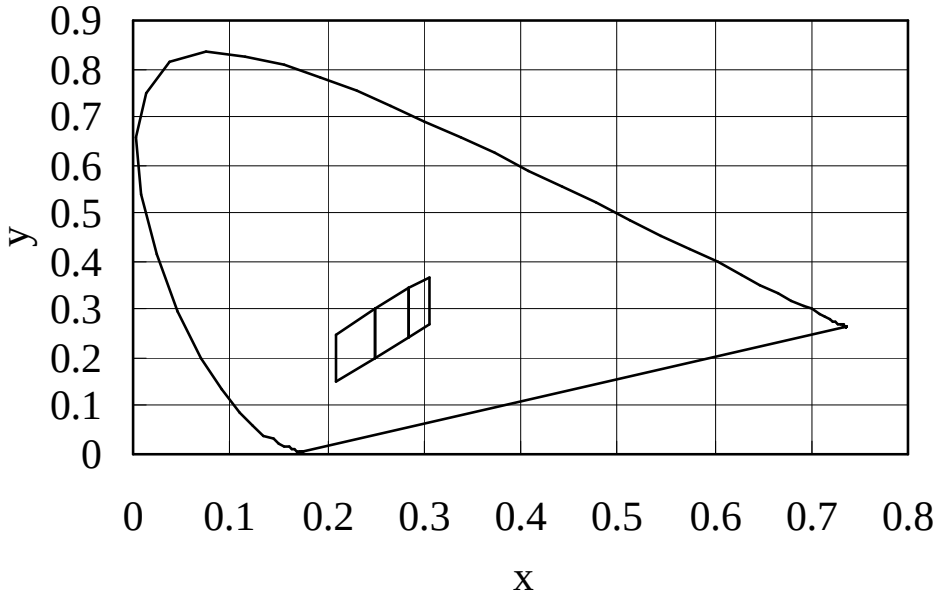
0.9
0.8
0.7
0.6
0.5
0.4
0.3
0.2
0.1
0
y
0
0.1
0.2
0.3
0.4
0.5
0.6
0.7
0.8
x

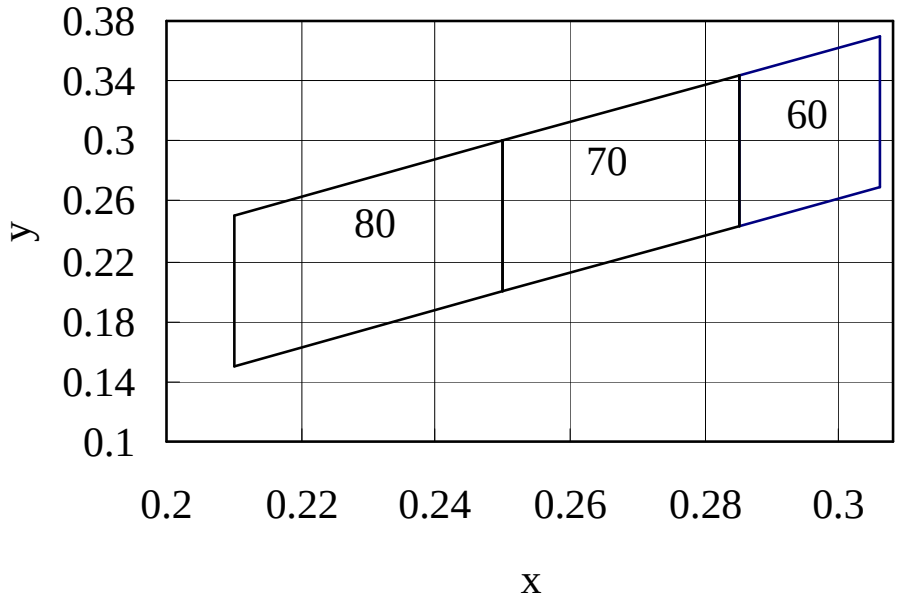
0.38
0.34
0.3
0.26
0.22
0.18
0.14
0.1
y
60
70
80
0.2
0.22
0.24
0.26
0.28
0.3
x

CAUTIONS

1. Application

The LEDs described here are intended to be used for ordinary electronic equipment (such as office equipment, communication equipment and household applications). Consult Liteon's Sales in advance for information on applications in which exceptional reliability is required, particularly when the failure or malfunction of the LEDs may directly jeopardize life or health (such as in aviation, transportation, traffic control equipment, medical and life support systems and safety devices).

2. Storage

The storage ambient for the LEDs should not exceed 30°C temperature or 70% relative humidity. It is recommended that LEDs out of their original packaging are used within three months.
For extended storage out of their original packaging, it is recommended that the LEDs be stored in a sealed container with appropriate desiccant or in a dessicator with nitrogen ambient.

3. Cleaning

Use alcohol-based cleaning solvents such as isopropyl alcohol to clean the LEDs if necessary.

4. Lead Forming & Assembly

During lead forming, the leads should be bent at a point at least 3mm from the base of LED lens. Do not use the base of the leadframe as a fulcrum during forming. Lead forming must be done before soldering at normal temperature. During assembly on PCB, use minimum clinch force possible to avoid excessive mechanical stress

5. Soldering

When soldering, leave a minimum of 2mm clearance from the base of the lens to the soldering point.
Dipping the lens into the solder must be avoided.
Do not apply any external stress to the lead frame during soldering while the LED is at high temperature.
Recommended soldering condition:

Soldering iron		Wave soldering	
Temperature Soldering time	300°C Max. 3 sec. Max. (one time only)	Pre-heat Pre-heat time Solder wave Soldering time	100°C Max. 60 sec. Max. 260°C Max. 10 sec. Max.

Note: Excessive soldering temperature and/or time might result in deformation of the LED lens or catastrophic failure of the LED. IR re-flow is not suitable process for through hole type LED lamp production.

6. Drive Method

An LED is a current operated device, In order to ensure intensity uniformity on multiple LEDs connected in parallel in an application; it is recommended that a current limiting resistor be incorporated in the drive circuit. In series with each LED as shown in Circuit A below.

Circuit model A

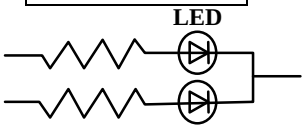

Circuit model B

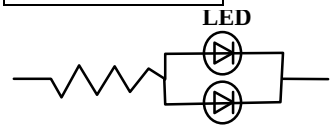

(A) Recommended circuit.
(B) The brightness of each LED might appear different due to the differences in the I-V characteristics of those LEDs

7. ESD (Electrostatic Discharge)

Static Electricity or power surge will damage the LED.

Suggestions to prevent ESD damage.

- Use a conductive wrist band or anti-electrostatic glove when handling these LEDs.
- All devices , equipment , and machinery must be properly grounded.
- Work tables , storage racks , etc. should be properly grounded .
- Use ion blower to neutralize the static charge which might have built up on surface of the LED's plastic lens as a result of friction between LEDs during storage and handling.

ESD-damaged LEDs will exhibit abnormal characteristics such as high reverse leakage current, low forward voltage, or “no lightup” at low currents. To verify for ESD damage, check for “lightup” and Vf of the suspect LEDs at low currents.

Suggested checking list :

Training and Certification

1. Everyone working in a static-safe area is ESD-certified?
2. Training records kept and re-certification dates monitored?

Static-Safe Workstation & Work Areas

1. Static-safe workstation or work-areas have ESD signs?
2. All surfaces and objects at all static-safe workstation and within 1 ft measure less than 100V?
3. All ionize activated, positioned towards the units?
4. Each work surface mats grounding is good?

Personnel Grounding

1. Every person (including visitors) handling ESD sensitive (ESDS) items wears wrist strap, heel strap or conductive shoes with conductive flooring?
2. If conductive footwear used, conductive flooring also present where operator stand or walk?
3. Garments, hairs or anything closer than 1 ft to ESD items measure less than 100V*?
4. Every wrist strap or heel strap/conductive shoes checked daily and result recorded for all DLs?
5. All wrist strap or heel strap checkers calibration up to date?
   Note: *50V for Blue LED.

Device Handling

1. Every ESDS items identified by EIA-471 labels on item or packaging?
2. All ESDS items completely inside properly closed static-shielding containers when not at static-safe workstation?
3. No static charge generators (e.g. plastics) inside shielding containers with ESDS items?
4. All flexible conductive and dissipative package materials inspected before reuse or recycles?

Others

1. Audit result reported to entity ESD control coordinator?
2. Corrective action from previous audits completed?
3. Are audit records complete and on file?

8. Others

White LED is materialized by combining blue LED and phosphors. Color of White LED is changed a little by an operating current.

The appearance and specifications of the product may be modified for improvement, without prior notice.