FEATURES

＊0.4-inch (10.0-mm) DIGIT HEIGHT
＊CONTINUOUS UNIFORM SEGMENTS
＊LOW POWER REQUIREMENT
＊EXCELLENT CHARACTERS APPEARANCE
＊HIGH BRIGHTNESS & HIGH CONTRAST
＊WIDE VIEWING ANGLE
＊SOLID STATE RELIABILITY
＊CATEGORIZED FOR LUMINOUS INTENSITY

DESCRIPTION

The LTD-4608A-17 is a 0.4 inch (10.0 mm) digit height dual digit seven-segment display. This device uses AMBER chips (GaAsP epi on GaP substrate). The display has gray face and white segments.

DEVICE

PART NO.	DESCRIPTION
AMBER	Duplex Common Anode
LTD-4608A-17	Rt. Hand Decimal

PACKAGE DIMENSIONS

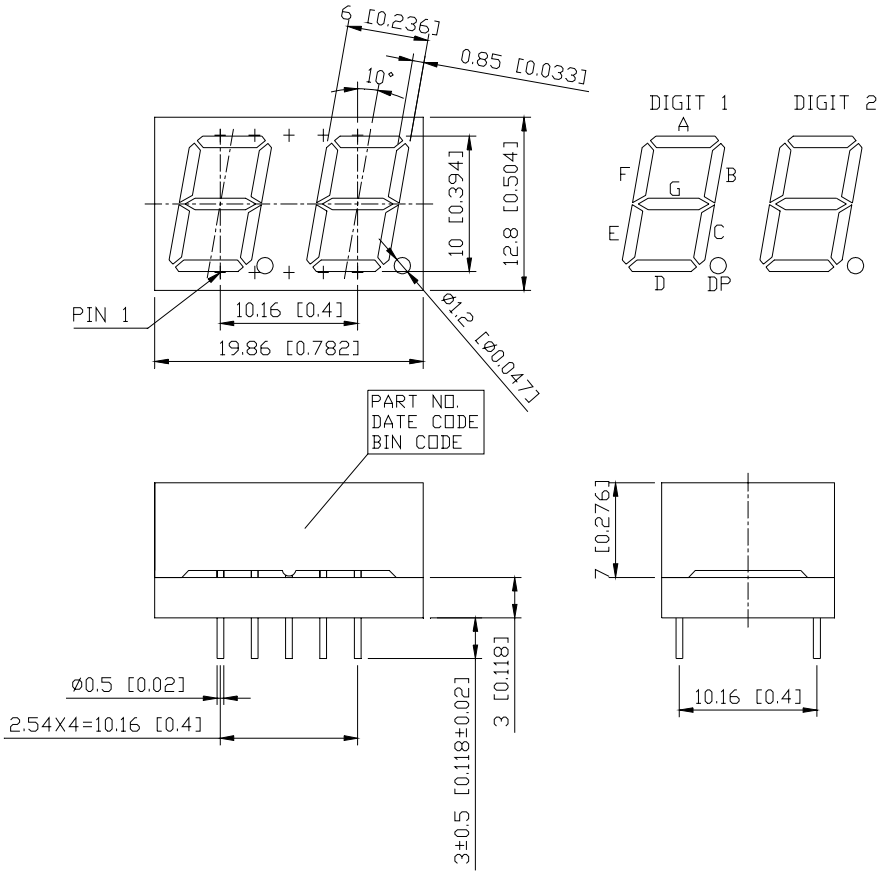

NOTES: All dimensions are in millimeters. Tolerances are± 0.25-mm (0.01“) unless otherwise noted.

INTERNAL CIRCUIT DIAGRAM

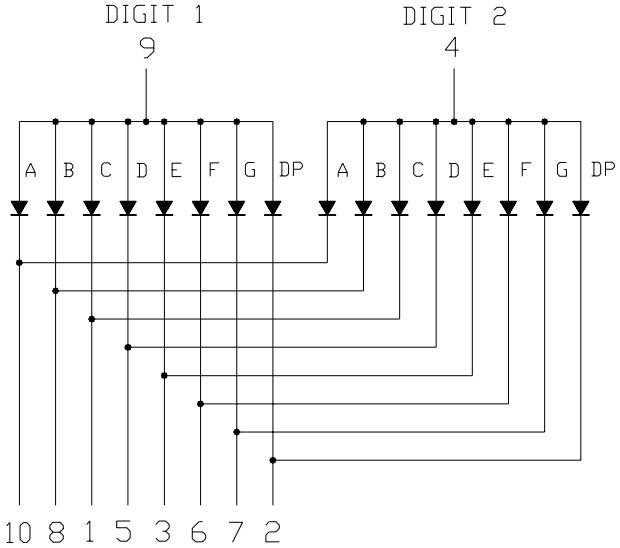

PIN CONNECTION

No.	CONNECTION
1	CATHODE C
2	CATHODE D.P.
3	CATHODE E
4	COMMON ANODE (DIGIT 2)
5	CATHODE D
6	CATHODE F
7	CATHODE G
8	CATHODE B
9	COMMON ANODE (DIGIT 1)
10	CATHODE A

ABSOLUTE MAXIMUM RATING

PARAMETER	MAXIMUM RATING	UNIT
Power Dissipation Per Segment	75	mW
Peak Forward Current Per Segment (1/10 Duty Cycle, 0.1ms Pulse Width)	100*	mA
Continuous Forward Current Per Segment Derating Linear From 25^0C Per Segment	25 0.28	mA mA/^{0}C
Reverse Voltage Per Segment	5	V
Operating Temperature Range	-35^0C to +85^0C	
Storage Temperature Range	-35^0C to +85^0C	
Soldering Conditions : 1/16 inch below seating plane for 3 seconds at 260^0C		

*see figure 5 to establish pulsed condition

ELECTRICAL / OPTICAL CHARACTERISTICS AT Ta = 25^oC

PARAMETER	SYMBOL	MIN.	TYP.	MAX.	UNIT	TEST CONDITION
Average Luminous Intensity	I_V	1300	2400		μcd	I_F=10mA
Peak Emission Wavelength	λp		610		nm	I_F=20mA
Spectral Line Half-Width	Δλ		35		nm	I_F=20mA
Dominant Wavelength	λd		602		nm	I_F=20mA
Forward Voltage Per Segment	V_F		2.1	2.6	V	I_F=20mA
Reverse Current Per Segment	I_R			100	μA	V_R=5V
Luminous Intensity Matching Ratio	I_V-m			2:1		I_F=10mA

Note: Luminous intensity is measured with a light sensor and filter combination that approximates the CIE (commision Internationale DE L'clariage) eye-response curve.

TYPICAL ELECTRICAL / OPTICAL CHARACTERISTIC CURVES

(25°C Ambient Temperature Unless Otherwise Noted)

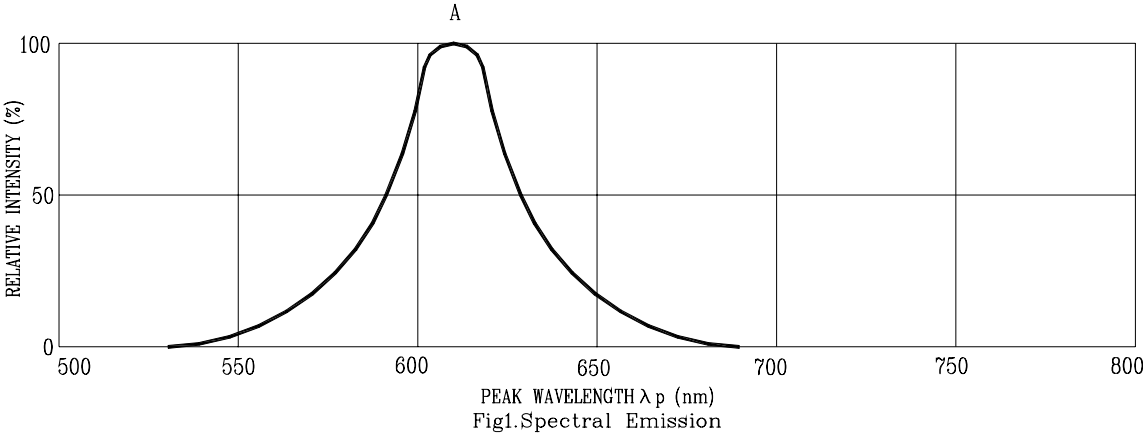

Fig1.Spectral Emission

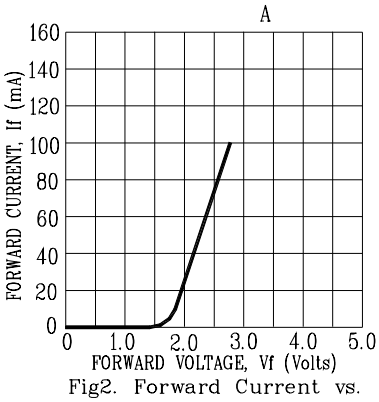

Fig2. Forward Current vs. Forward Voltage

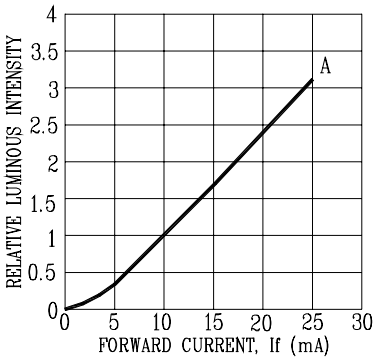

Fig3. Relative Luminous Intensity vs. DC Forward Current

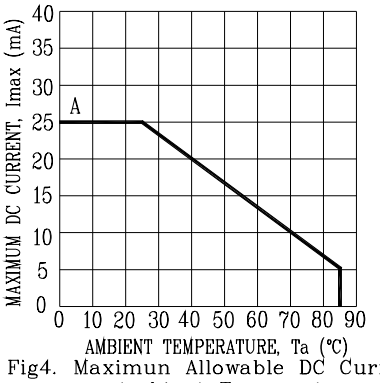

Fig4. Maximun Allowable DC Current vs. Ambient Temperature

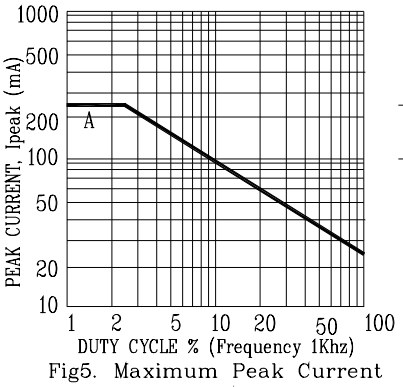

Fig5. Maximum Peak Current vs. Duty Cycle %

OPERATION IN THIS REGION REQUIRES TEMPERATURE DERATING OF Ipeak MAXIMUN

NOTE: A= AMBER