IGBT/MOSFET Gate Drive Optocoupler to Induction Cooking

ABSTRACT

Liteon offered the best solution what IGBTs/MOSFETs Gate Drive Optocoupler for Induction Heating (Cooking) applications. Liteon have High CMR, 2.5A/3.0A Output peak current, Rail-to-Rail Output voltage, etc components.

The **LTV-3120** contains a GaAlAs LED optically coupled to an integrated circuit with a power output stage. It is ideally suited for driving power IGBTs and MOSFETs used in Motor Control, Inverters, SMPS, Induction Heating (Cooking) and Industrial Applications.

The 2.5A peak output current is capable of directly driving most IGBTs and MOSFETs with ratings of up to 1,200V/100A. For IGBTs and MOSFETs with higher ratings, the LTV-3120 can be used to drive a discrete power stage which drives the IGBT or MOSFET gate.

The LTV-3120 has an operating temperature of -40°C to 100°C, this makes it ideal for use in applications that operate in industrial environments.

The **LTV-341** series Optocoupler is ideally suited for driving power IGBTs and MOSFETs used in motor control inverter applications and inverters in power supply system. It contains a AlGaAs LED optically coupled to an integrated circuit with a power output stage. The 1.0A peak output current is capable of directly driving most IGBTs with ratings up to 1200V/100A. For IGBTs with higher ratings, the LTV-341 series can be used to drive a discrete power stage which drives the IGBT gate.

The LTV-341P and LTV-341W have the highest insulation voltage of V_{IORM} = 891 V_{Peak} and V_{IORM} = 1140 V_{Peak} respectively.

Selection Guide

Device	Package	Functional Diagram	Features
LTV-3120	DIP-8 SMD-8	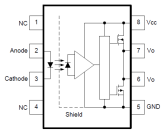	✓ High CMR 25KV/μs @V_{CM}=1500(V) ✓ V_{CC} = 15~30(V) wide operating range ✓ 2.5A Output peak current
LTV-341	LSOP6	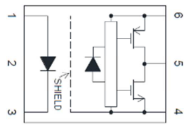	✓ Rail-to-Rail Output voltage ✓ Under Voltage Lock-Out protection ✓ 3.0A Output peak current

Notes: **LTV-3120** (M.P. now) and **LTV-341** (engineering samples ready now, M.P. schedule in Dec'14)

Induction Cooking Applications and Topologies

An induction cooker transfers electrical energy by induction from a coil of wire into a metal vessel that must be ferromagnetic. The coil is mounted under the cooking surface, and a large alternating current is passed through it. The current creates a dynamic magnetic field. When an electrically conductive pot is brought close to the cooking surface, the magnetic field induces eddy currents in the pot. The eddy currents flow through the electrical resistance of the pot to produce heat, the pot then in turn heats its contents by heat conduction.

On the market, have real induction cooker such as ***Fig.1***

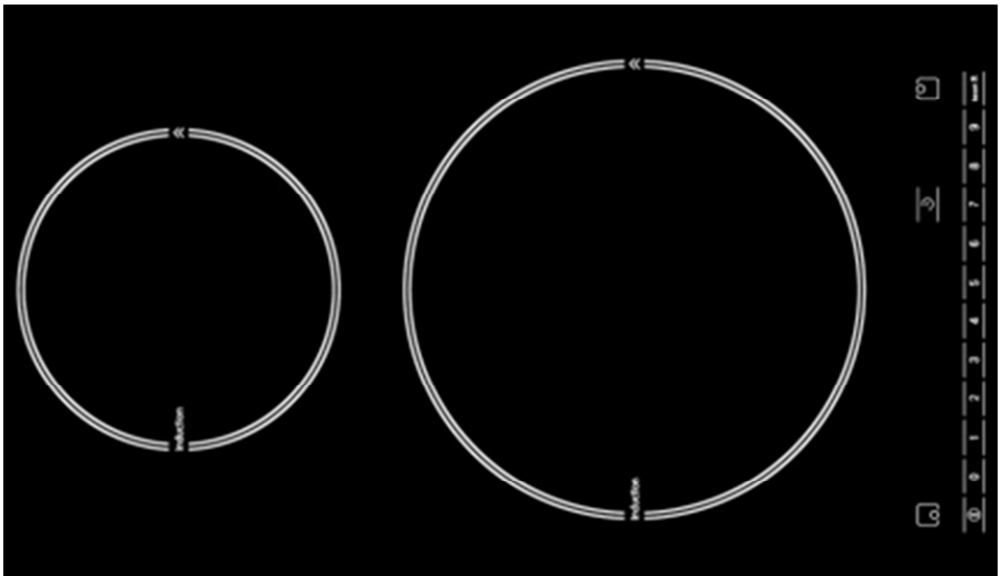

Fig. 1 Induction Cooker of Dual Pot

Induction cookers supply energy directly to the cooking vessel by using an induction heater. The heat level can be adjusted from very high to low for good cooking. Liteon's LTV-3120 and LTV-341 IGBT/MOSFET gate drive optocoupler are used for induction heaters, microcontrollers for temperature control, cooling fans control and current sensor monitor, etc.

Block Diagram

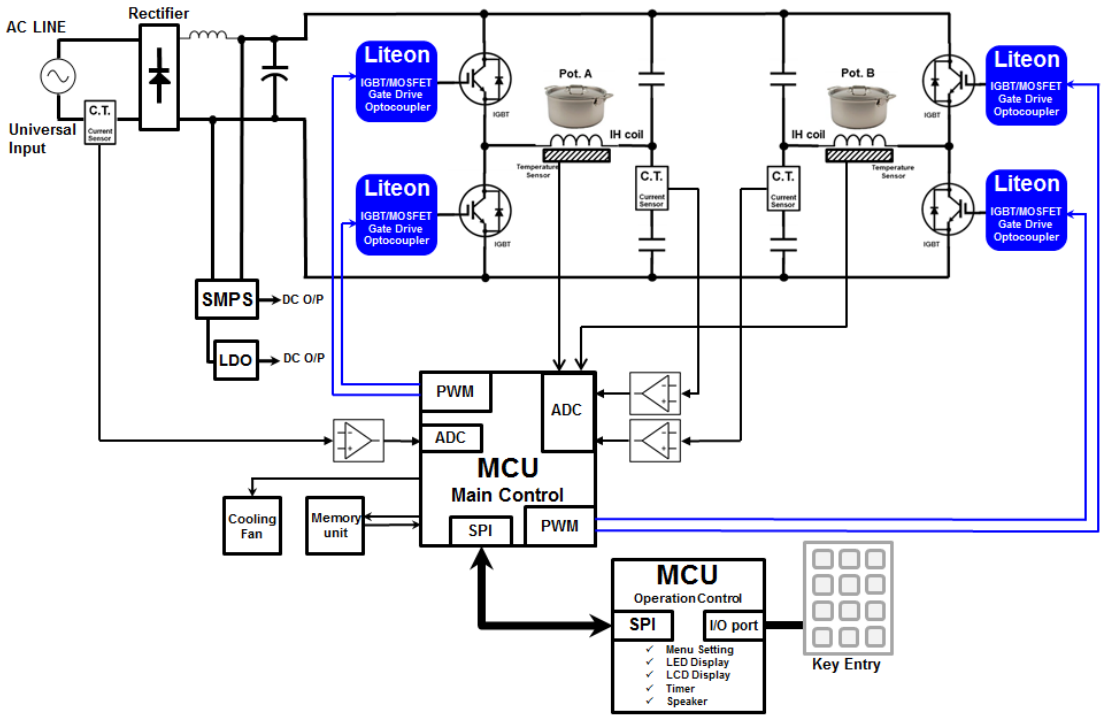

Fig. 2 Block Diagram of Induction Cooking

Liteon Technology offered the IGBT/MOSFET gate drive optocoupler that can match different IGBTs/MOSFETs for Induction Heating applications. Optimized for Induction Cooking, these IGBTs/MOSFETs gate drive optocoupler contain High CMR, High Output peak current, Rail-to-Rail Output Voltage that are able to attain a balance between switching and conduction losses. In addition, Liteon's solutions notably lead the market with best-performance ratio, as we ensure system efficiency and minimize total losses.

CONTACT INFORMATION

Contact Us @Website

http://optoelectronics.liteon.com/en-global/Form/contact

Headquarter

LITE-ON Technology Corp.
Address: 90, Chien 1 Road, Chung Ho, New Taipei City, Taiwan, R.O.C.
Post Code: 23585
Tel: +886-2-2222-6181~8
Fax: +886-2-2221-1948

Factory

LITE-ON Electronics (Tian Jin) Co., LTD.
Address: No. 11 Fu-Yuan Road, Wuqing Development Area, Tianjin, China
Post Code: 301700
Tel: +86-22-82193000
Fax: +86-22-82193065

LITE-ON Technology (Chang Zhou) Co., LTD.
Address: No. 88, Yanghu Road, Wujin Hi-Tech Indutrial Development Zone, Jiangsu Province, China
Post Code: 213166
Tel: +86-519-83068888
Fax: +86-519-83069999

LITE-ON Electronics (Thailand) Co., LTD.
Address: 38/4 Moo 1, Rangsit Ongkarak Road, Bunyeetoh Tanyaburi Patthumthani 12130 Bangkok, Thailand
Post Code:
Tel: +662-5331208~16
Fax: +662-5331747

Sales Office

Asia/Pacific

LITE-ON Technology Corp.
Address: 90, Chien 1 Road, Chung Ho, New Taipei City, Taiwan, R.O.C.
Post Code: 23585
Tel: +886-2-2222-6181~8
Fax: +886-2-2221-1948

LITE-ON Electronics (Tian Jin) Co., LTD.
Address: No. 11 Fu-Yuan Road, Wuqing Development Area, Tianjin, China
Post Code: 301700
Tel: +86-22-82193000
Fax: +86-22-82193065

LITE-ON Technology (Chang Zhou) Co., LTD.
Address: No. 88, Yanghu Road, Wujin Hi-Tech Indutrial Development Zone, Jiangsu Province, China
Post Code: 213166
Tel: +86-519-83068888
Fax: +86-519-83069999

LITE-ON Electronics (Thailand) Co., LTD.
Address: 38/4 Moo 1, Rangsit Ongkarak Road, Bunyeetoh Tanyaburi Patthumthani 12130 Bangkok, Thailand
Post Code:
Tel: +662-5331208~16
Fax: +662-5331747

LITE-ON Electronics (Tian Jin) CO., LTD.
Address: No. 11 Fu-Yuan Road, Wuqing Development Area, Tianjin, China
Post Code: 301700
Tel: +86-22-82193000
Fax: +86-22-82193065

LITE-ON Technology (Chang Zhou) Co., LTD.
Address: No. 88, Yanghu Road, Wujin Hi-Tech Indutrial Development Zone, Jiangsu Province, China
Post Code: 213166
Tel: +86-519-83068888
Fax: +86-519-83069999

LITE-ON Electronics (Dongguang) Co., LTD.
Address: NO. 1 Zheng An Road, Shang Jiao Section Chang An Town, Dongguang City, Guangdong, China
Post Code: 523878
Tel: +86-769-88611108
Fax: +86-769-88611128

LITE-ON Electronics H.K. LTD.
Address: RM 904-905, 9/Fl., International Plaza, 20 Sheung Yuet Road, Kowloon Bay, Kowloon H.K.
Post Code: 523878
Tel: +852-27963012~4
Fax: +852-27960044

LITE-ON JAPAN LTD
Address: 8F, No.2 Dic Bldg.,2-16-2 Sotokanda,Chiyoda-Ku, Tokyo Japan
Post Code: 101-0021
Tel: +81-3-3258-6502
Fax: +81-3-3239-6505

LITE-ON Singapore Pte Ltd
Address: 22, Sin Ming Lane,#03-83 Midview City Singapore
Post Code: 573969
Tel: +65-6349-0918
Fax: +65-6349-0910

Jay Tronics Inc.
Address: 15F Daerung Technotown 12 Cha, Gasan-dong, Geumcheon-gu, Seoul, Korea
Post Code: 327-32
Tel: +82-2-705-4942
Fax: +82-2-2060-3399

America

LITE-ON, INC.
Address: 720 S. Hillview Drive. Milpitas, CA
Post Code: 95035
Tel: +1-408-946-4873
Fax: +1-408-941-4597

LITE-ON INC. (Austin)
Address: 1826 Kramer Lane, Building A, Suite D, Austin,TX
Post Code: 78758
Tel: +1-512-835-6052
Fax: +1-512-835-4942

LITE-ON INC. (Dallas)
Address: 2716 Woodbury Drive Flower Mound, TX
Post Code: 75028
Tel: +1-972-539-5702
Fax: +1-512-835-4942

LITE-ON, INC. (Atlanta)
Address: 1781 Hickory Path Way Suwanee, GA
Post Code: 30024
Tel: +1-512-691-3344
Fax: +1-512-835-4942

LITE-ON, INC. (Chicago)
Address: 23201 - 117TH STREET TREVOR, WI
Post Code: 53179
Tel: +1-262-862-9451
Fax: +1-262-862-9460

Europe

LITE-ON ELECTRONICS (Europe) Ltd.
Address: 23, Apex Business Village, Cramlington, Northumberland, UK
Post Code: NE23 7BF
Tel: +44 191 250 4931
Fax: +44 191 250 4798

LITE-ON Technology (Europe) BV,
Address: De Haag 8, 3993 AW, Houten, The Netherlands
Post Code:
Tel: +31 6 51665188
Fax:

LITE-ON Technology (Europe) B.V.
Address: Havelstrasse 7, 24539 Neumuenster, Germany
Post Code:
Tel: +49 4321 55555-0
Fax: +49 4321 55555-29