FEATURES

* SNAP MOUNTING.
* MECHANICAL SWITCH REPLACEMENT.
* WIRE OR CONNECTOR FOR ELECTRICAL CONNECTION.
* CUSTOMIZED LEVER ARM CAN BE DESIGNED FOR SPECIFIC APPLICATION.

PACKAGE DIMENSIONS

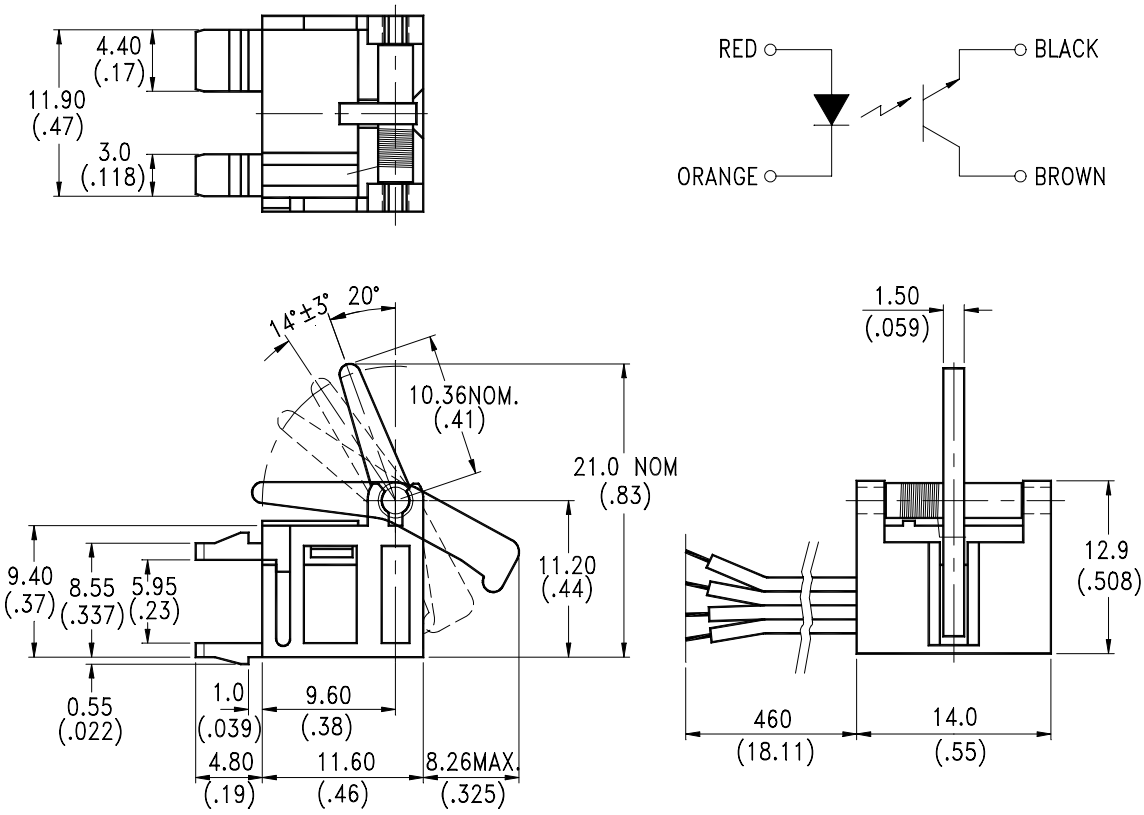

NOTES:

1. All dimensions are in millimeters (inches).
2. Tolerance is ±0.25mm(.010") unless otherwise noted.

ABSOLUTE MAXIMUM RATINGS AT T_A=25℃

PARAMETER	SYMBOL	MAXIMUM RATING	UNIT
INPUT LED			
Power Dissipation	P_D	75	mW
Peak Forward Current (300 pps , 10 μS pulse)	I_{CP}	1	A
Continuous Forward Current	I_F	60	mA
Reverse Voltage	V_R	5	V
OUTPUT PHOTOTRANSISTOR			
Power Dissipation	P_C	100	mW
Collector-Emitter Voltage	V_{CEO}	30	V
Emitter-Collector Voltage	V_{ECO}	5	V
Collector Current	I_C	20	mA
Operating Temperature Range	T_{opr}	-20℃ to + 75℃	
Storage Temperature Range	T_{stg}	-40℃ to + 85℃	

ELECTRICAL OPTICAL CHARACTERISTICS AT T_A=25℃

PARAMETER	SYMBOL	MIN.	TYP.	MAX.	UNIT	TEST CONDITION
INPUT LED						
Forward Voltage	V_F		1.2	1.6	V	I_F = 20mA
Reverse Current	I_R			100	μA	V_R=5V
OUTPUT PHOTOTRANSISTOR						
Collector-Emitter Breakdown Voltage	$V_{(BR)CEO}$	30			V	IC=1mA
Emitter-Collector Breakdown Voltage	$V_{(BR)ECO}$	5			V	IE=100 μA
Collector-Emitter Dark Current	I_{CEO}			100	nA	V_{CE}=10V
COUPLER						
Collector-Emitter Saturation Voltage	$V_{CE(SAT)}$			0.4	V	I_C=0.25mA I_F=20mA
On State Collector Current	$I_{C(ON)}$	0.5	2.0		mA	V_{CE}=5V I_F=20mA

TYPICAL ELECTRICAL / OPTICAL CHARACTERISTICS CURVES

(25℃ Ambient Temperature Unless Otherwise Noted)

Fig.1 Power Dissipation vs. Ambient Temperature

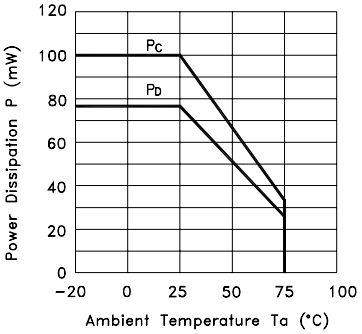

Fig.2 Forward Current vs. Forward Voltage

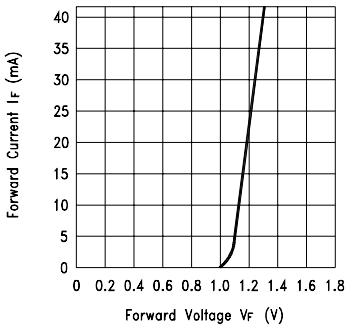

Fig.3 Cllector Current vs. Collector−emitter Voltage

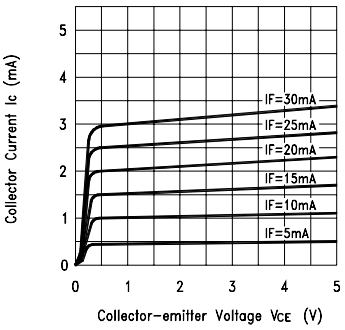

Fig.4 Collector Current vs. Ambient Temperature

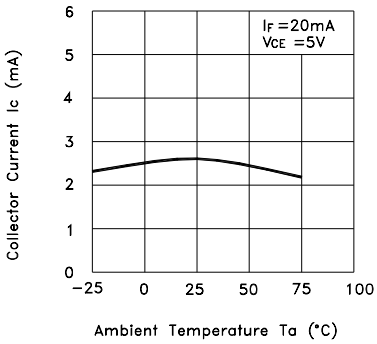
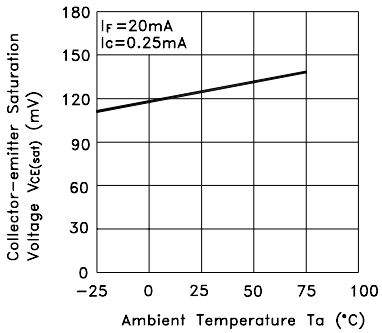
Fig.5 Collector−emitter Saturation Voltage vs. Ambient Temperature