FEATURES

* TTL INTERFACE COMPATIBLE
* HIGH SPEED OPTIC SIGNAL TRANSMISSION
* BUILT-IN LED DRIVER
* BUILT-IN CURRENT LIMIT RESISTOR
* LOW POWER CONSUMPTION

PACKAGE DIMENSIONS

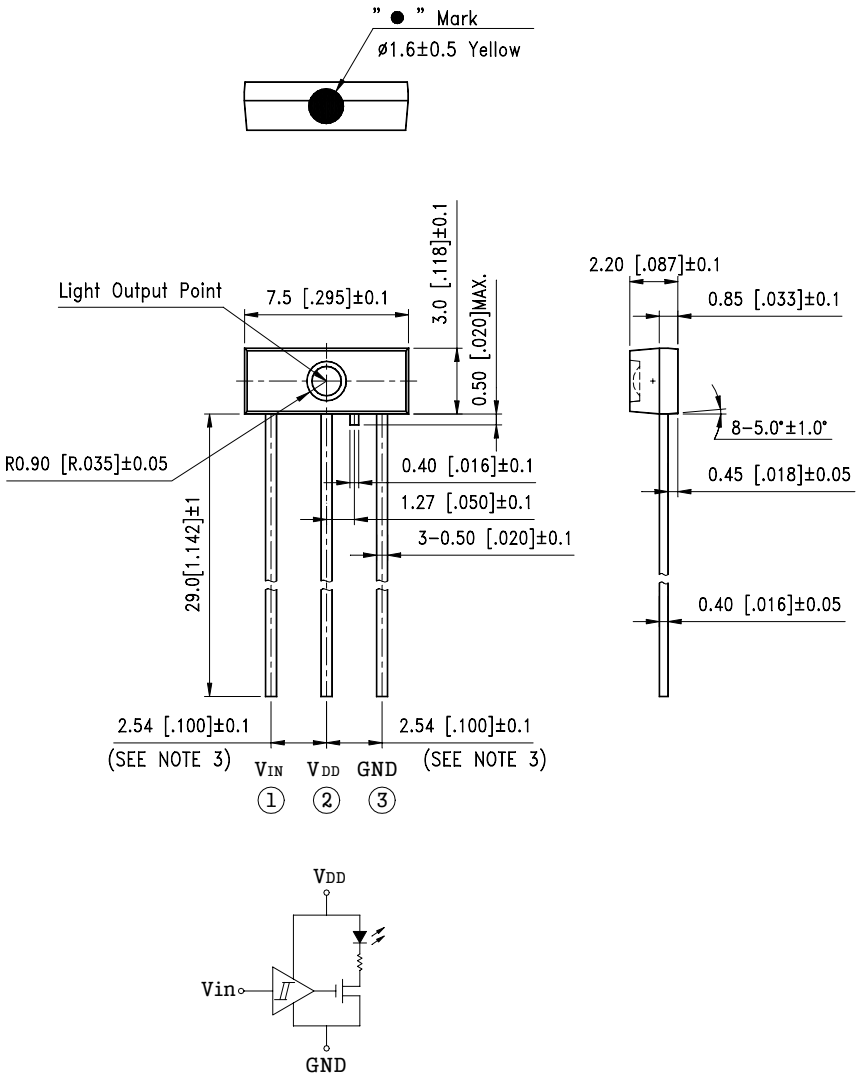

NOTES:
1. All dimensions are in millimeters (inches).
2. Tolerance is ±0.15mm(.006") unless otherwise noted.
3. Lead spacing is measured where the leads emerge from the package.

ABSOLUTE MAXIMUM RATINGS AT TA=25℃

PARAMETER	MAXIMUM RATING	UNIT
Supply Voltage (V_{DD})	-0.5 ~ +7	V
Input Voltage (V_{IN})	-0.5 ~ V_{DD} +0.5	V
Operating Temperature Range	-20 ℃ to + 70 ℃	
Storage Temperature Range	-30 ℃ to + 80 ℃	
Lead Soldering Temperature [1.6mm(.063") From Body]	260℃ for 5 Seconds	

ELECTRICAL OPTICAL CHARACTERISTICS AT TA=25℃

PARAMETER	SYMBOL	MIN.	TYP.	MAX.	UNIT	TEST CONDITION
Transmission Speed	Ts	—	—	13.2	Mbps	NRZ signal
Operating Voltage	V_{DD}	2.75	—	5.25	V	
Peak Emission Wavelength	λ_{Peak}	630	650	690	nm	
Fiber coupling light output	Pc	-21	-17	-15	dBm	*1
Dissipation current	I_{DD}	—	6	8	mA	*2
High level input voltage	V_{IH}	2	—	—	V	
Low level input voltage	V_{IL}	—	—	0.8	V	
"Low→High"propagation delay time	t_{PLH}	—	—	166	hs	*3
"High→Low"propagation delay time	t_{PHL}	—	—	155	hs	
Pulse width distortion	Δt_W	-18	—	+18	hs	
Viewing Angle (See FIG.2)	$2\theta_{1/2}$	—	90	—	deg.	
Jitter	Δt_j	—	1	18	hs	

***1 Measuring method of optical output coupling power**

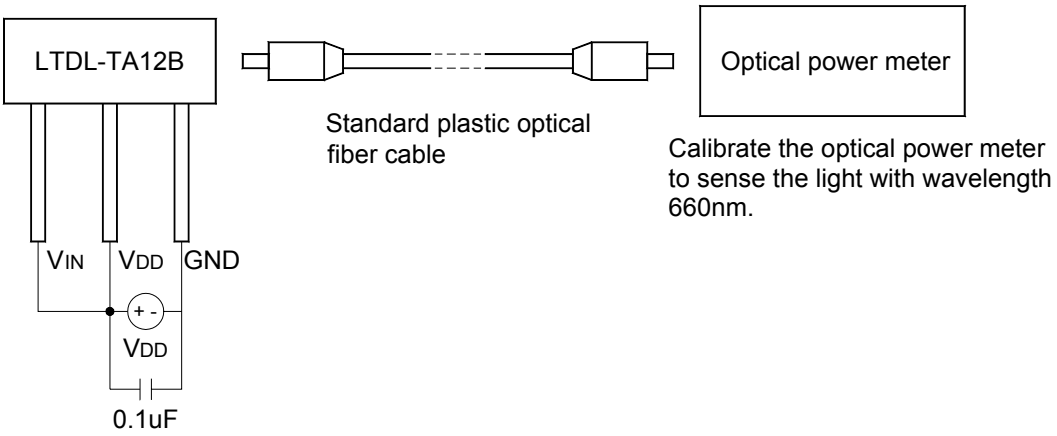

***2 Power dissipation measuring method**

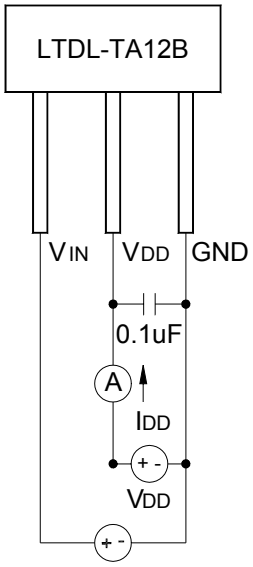

***3 Measuring pulse response**

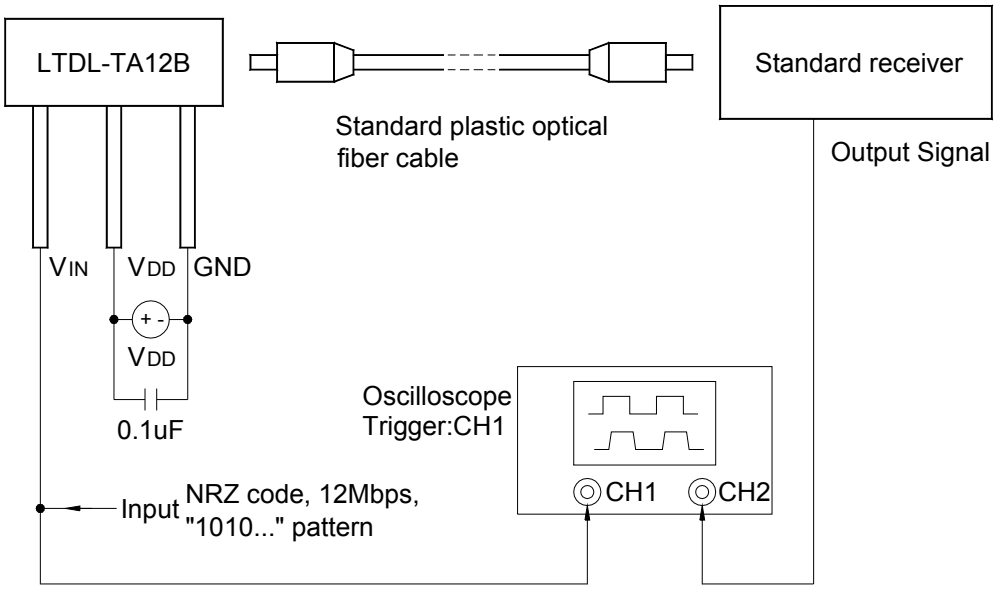

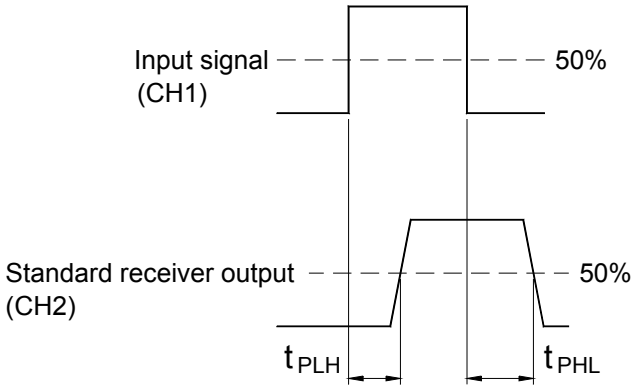

Pulse width distortion $\triangle tw = t_{PHL} - t_{PLH}$

Note
(1)The impedance of the probe for the oscilloscope must be more than 1MΩ and less than 10pf.

TYPICAL ELECTRICAL / OPTICAL CHARACTERISTICS CURVES

(25℃ Ambient Temperature Unless Otherwise Noted)

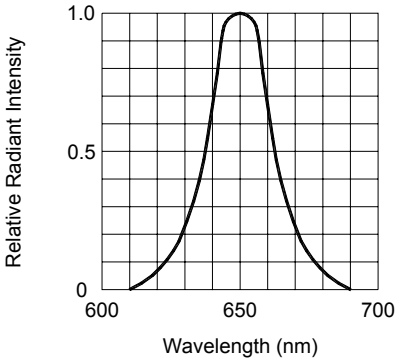

FIG.1 SPECTRAL DISTRIBUTION

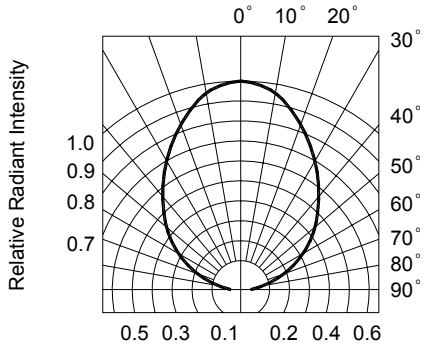

FIG.2 RADIATION DIAGRAM