FEATURES

* High speed transmission （13.2 Mbps , NRZ code ）
* Build-in LED driving circuit allows connecting directly to modulation IC for digital audio equipment.
* Wide range of operating voltage from 3V to 5V
* Same package as fiber optic receiving module LTDL-RX16P04

APPLICATIONS

* Digital audio system
* CD & DVD players

PACKAGE DIMENSIONS

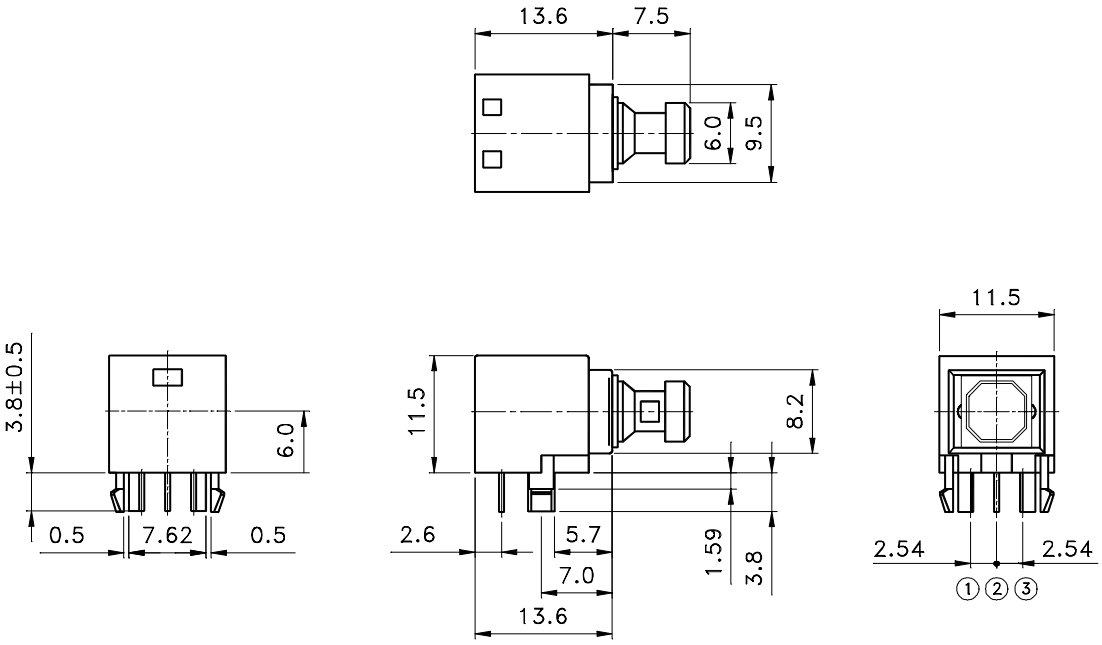

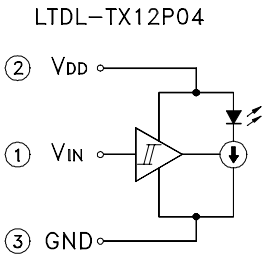

NOTES:
1. All dimensions are in millimeters.
2. Tolerance is ±0.3 mm unless otherwise noted.

ELECTRO－OPTICAL CHARACTERISTICS

ABSOLUTE MAXIMUM RATINGS AT TA=25℃

PARAMETER	MAXIMUM RATING	UNIT
Supply Voltage (V_{DD})	-0.5 ~ +7	V
Input Voltage (V_{IN})	-0.5 ~ V_{DD} +0.5	V
Operating Temperature Range	-20 ℃ to +70℃	
Storage Temperature Range	-30 ℃ to +80℃	
Lead Soldering Temperature [1.6mm(.063") From Body]	260℃ for 5 Seconds	

ELECTRICAL OPTICAL CHARACTERISTICS AT TA=25℃

PARAMETER	SYMBOL	MIN.	TYP.	MAX.	UNIT	TEST CONDITION
Data Rate	Ts	—	—	13.2	Mbps	NRZ code
Operating Voltage	V_{DD}	2.75	—	5.25	V	
Peak Emission Wavelength	λ_{Peak}	630	650	690	nm	
Fiber Coupling Light Output	Pc	-21	-17	-15	dBm	*1
Current Consumption	I_{DD}	—	6	8	mA	
High Level Input Voltage	V_{IH}	2	—	—	V	
Low Level Input Voltage	V_{IL}	—	—	0.8	V	
“Low→High”propagation delay time	t_{PLH}	—	—	166	ns	*2
“High→Low”propagation delay time	t_{PHL}	—	—	155	ns	
Pulse Width Distortion	Δt_W	-18	—	+18	ns	
Jitter	Δt_j	—	1	18	ns	*2

***1 Measuring method of fiber coupling optical power output**

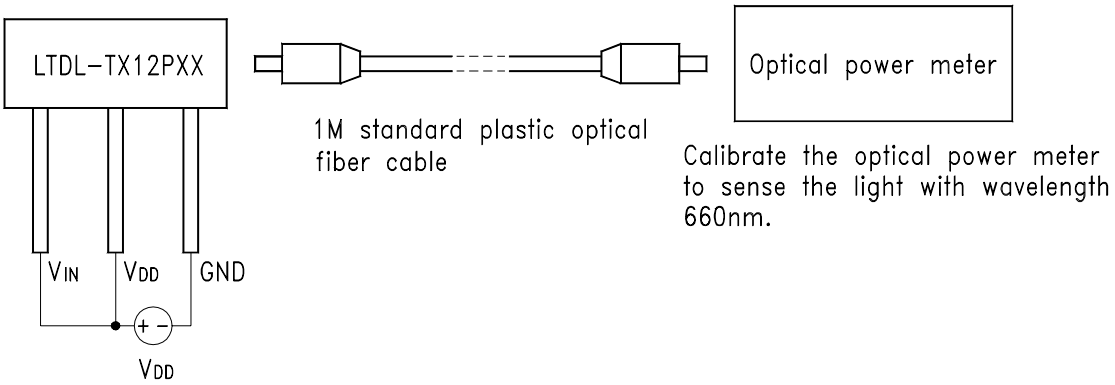

***2 Measuring method of pulse response and jitter**

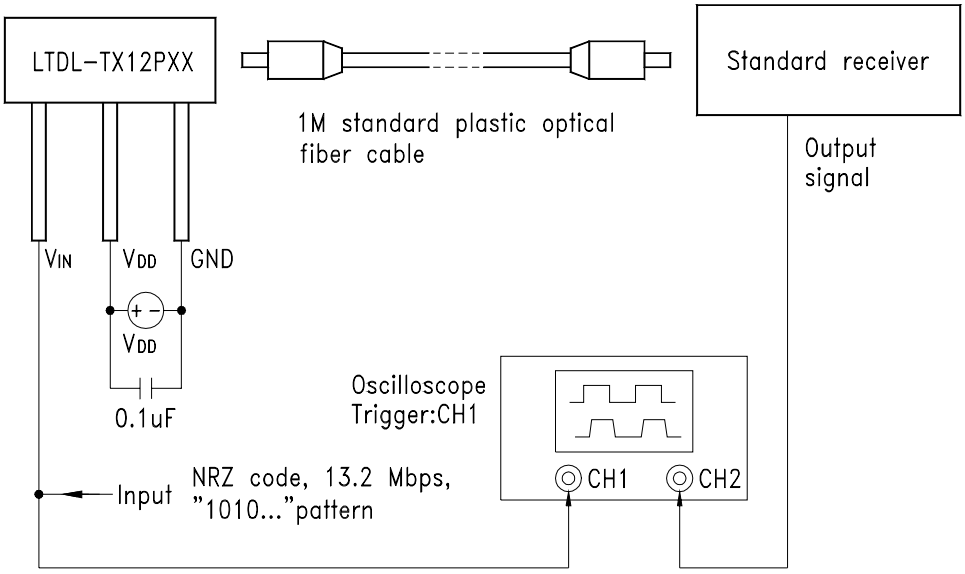

Rise and Fall Times and Pulse Width Distortion

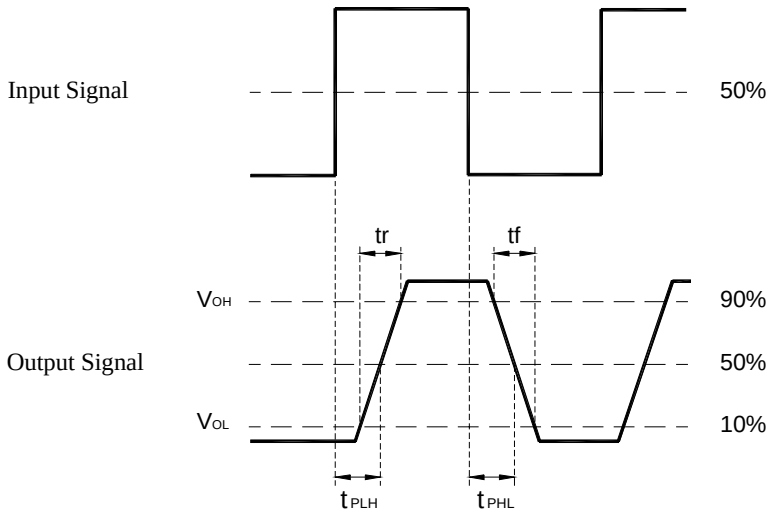

Pulse Width Distortion= $\triangle tw = t_{PHL} - t_{PLH}$
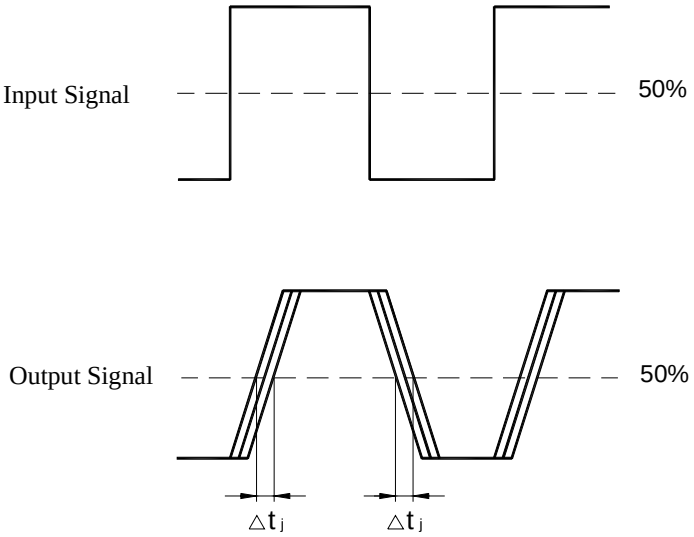
Jitter