LITEON®
OPTOELECTRONICS

Through Hole Lamp Product Data Sheet

LTW5L3DW7JS-032A

Spec No. :DS20-2015-0050
Effective Date: 04/27/2017
Revision: A

LITE-ON DCC
RELEASE

BNS-OD-FC001/A4

LITE-ON Technology Corp. / Optoelectronics
No.90,Chien 1 Road, Chung Ho, New Taipei City 23585, Taiwan, R.O.C.
Tel: 886-2-2222-6181 Fax: 886-2-2221-1948 / 886-2-2221-0660
http://www.liteon.com/opto

Through Hole Lamp

LTW5L3DW7JS-032A

Rev	Description	By	Date
Above data for PD and Customer tracking only			
-	Approved and Upload OPNC.	Craig	07/14/2015
A	Update page 5	Banjerdluk P.	04/22/2017

Through Hole Lamp
LTW5L3DW7JS-032A

1. Description

White lamps for outdoor application are offered in a variety of packages such as 3mm, 5mm, oval type which is suitable for traffic signal and massage board applications with smooth radiation pattern. Advanced epoxy technology has a good moisture resistance and UV protection to be us in package and it can reduce the effect of long term exposure in outdoor environment.

1. 1. Features

- Lead (Pb) free product - RoHS compliant
- Low power consumption & High efficiency.
- High efficiency & reliability.
- Versatile mounting on p.c. board or panel.
- I.C. compatible/low current requirement.
- Popular 5mm oval diameter. InGaN White & White Diffused lens.

1.2. Applications

- Massage sign
- Bus sign
- Traffic sign
- Traffic signal

2. Outline Dimensions

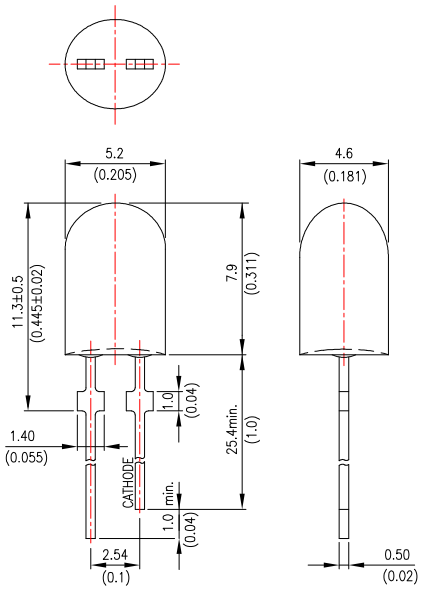

Notes :

1. All dimensions are in millimeters (inches).
2. Tolerance is ±0.25mm (.010") unless otherwise noted.
3. Protruded resin under flange is 1.0mm (.04") max.
4. Lead spacing is measured where the leads emerge from the package.
5. Specifications are subject to change without notice.

3. Absolute Maximum Ratings at TA=25℃

Parameter	Maximum Rating	Unit
Power Dissipation	96	mW
Peak Forward Current (Duty Cycle≦1/10, Pulse Width≦10ms)	100	mA
DC Forward Current	30	mA
Derating Linear From 47℃	0.56	mA/℃
Operating Temperature Range	-40℃ to + 85℃	
Storage Temperature Range	-40℃ to + 100℃	
Lead Soldering Temperature [2.0mm (.079") From Body]	260℃ for 5 Seconds Max.	

4. Electrical / Optical Characteristics at TA=25℃

Parameter	Symbol	Min.	Typ.	Max.	Unit	Test Condition
Luminous Intensity	IV	4200	6000	9300	mcd	IF = 20mA Note 1,3,4
Viewing Angle	2θ1/2		70 / 35		deg	Note 2 (Fig.6)
Chromaticity Coordinates	x		0.31			IF = 20mA, Note 5 Hue Spec. Table & Chromaticity Diagram
	y		0.32			
Forward Voltage	VF	2.5	2.9	3.2	V	IF = 20mA
Reverse Current	IR			10	μA	VR = 5V

NOTE:

1. Luminous intensity is measured with a light sensor and filter combination that approximates the CIE eye-response curve.
2. θ1/2 is the off-axis angle at which the luminous intensity is half the axial luminous intensity.
3. Iv classification code is marked on each packing bag.
4. The Iv guarantee must be included with ±15% testing tolerance.
5. The chromaticity coordinates (x, y) is derived from the 1931 CIE chromaticity diagram..
6. Reverse voltage (VR) condition is applied for IR test only. The device is not designed for reverse operation.

5. Typical Electrical / Optical Characteristics Curves

(25℃ Ambient Temperature Unless Otherwise Noted)

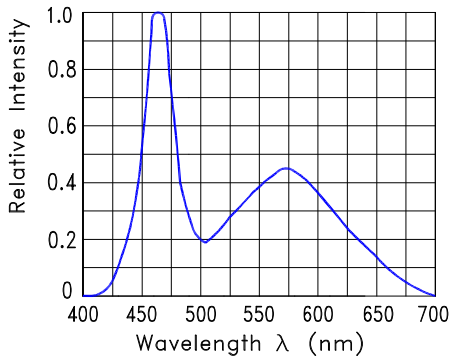

Fig.1 Relative Intensity VS. Wavelength

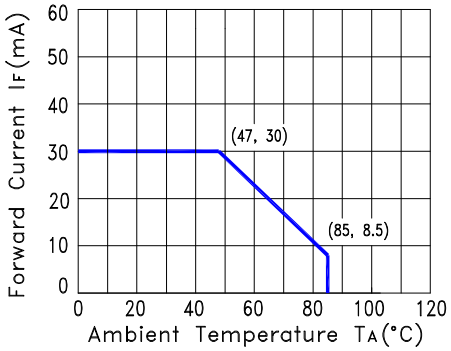

Fig.2 Forward Current Derating Curve

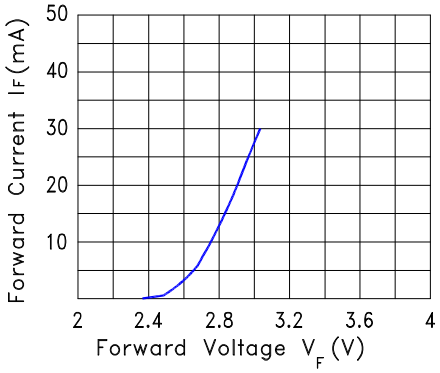

Fig.3 Forward Current vs. Forward Voltage

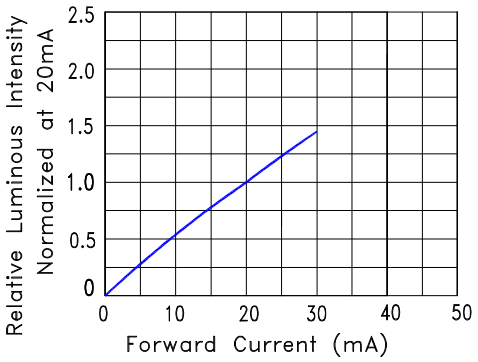

Fig.4 Relative Luminous Intensity vs. Forward Current

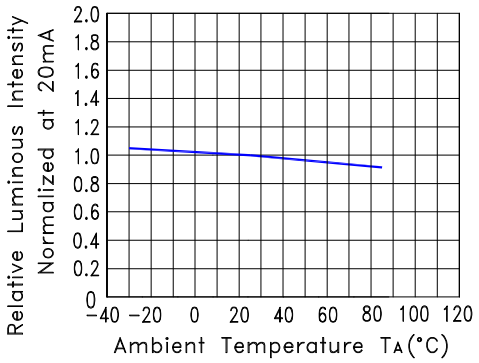

Fig.5 Relative Luminous Intensity VS. Ambient Temperature

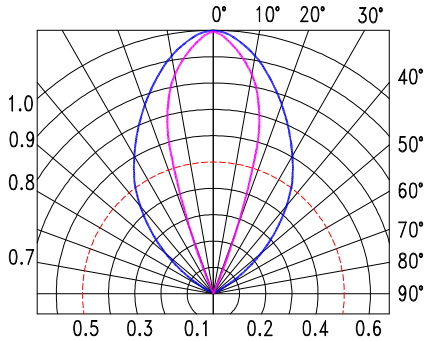

Fig.6 Spatial Distribution

6. Taping Features

* Compatible with radial lead automatic insertion equipment.
* Most radial lead plastic lead lamps available packaged in tape and folding.
* 2.54mm (0.1") straight lead spacing available.
* Folding packaging simplifies handling and testing.
* Reel packaging is available by removing suffix “A” on option.

Package Dimensions

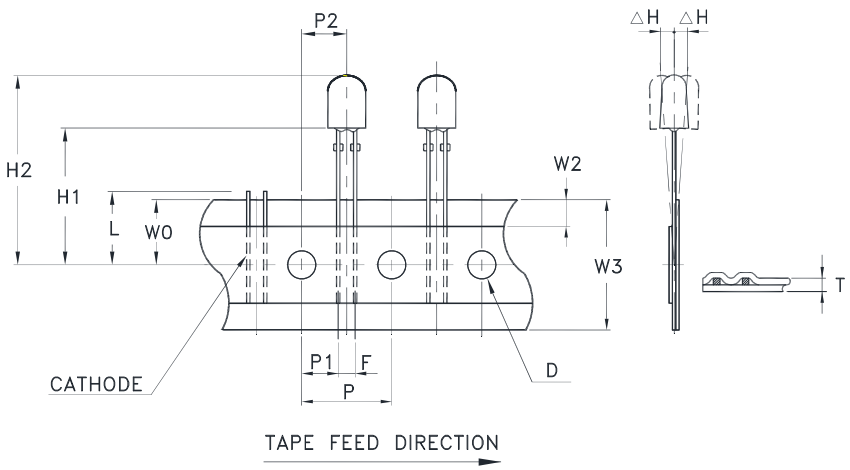

Item	Symbol	Specification			
		Minimum		Maximum	
		mm	inch	mm	inch
Tape Feed Hole Diameter	D	3.8	0.149	4.2	0.165
Component Lead Pitch	F	2.3	0.091	3.0	0.118
Front to Rear Deflection	ΔH	--	--	2.0	0.078
Feed Hole to Bottom of Component	H1	20.0	0.787	21.0	0.827
Feed Hole to Overall Component Height	H2	27.6	1.087	29.2	1.150
Lead Length After Component Height	L	W0		11.0	0.433
Feed Hole Pitch	P	12.4	0.488	13.0	0.511
Lead Location	P1	4.4	0.173	5.8	0.228
Center of Component Location	P2	5.05	0.198	7.65	0.301
Total Tape Thickness	T	--	--	0.90	0.035
Feed Hole Location	W0	8.5	0.334	9.75	0.384
Adhesive Tape Position	W2	0	0	3.0	0.118
Tape Width	W3	17.5	0.689	19.0	0.748

7. Packing Spec.

Total 2,000pcs per inner carton

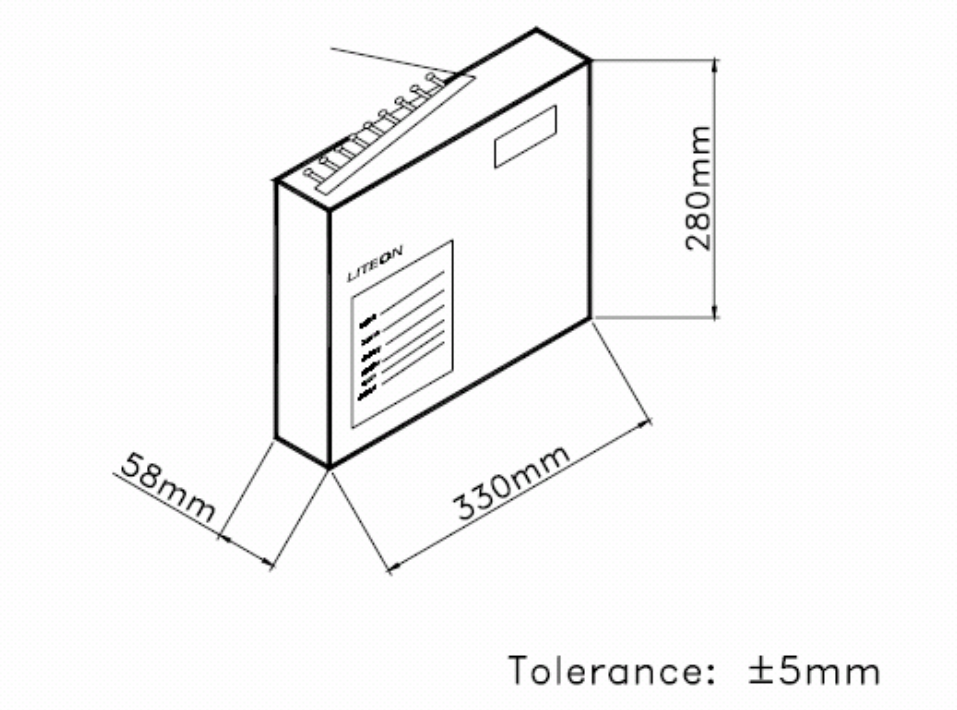

10 Inner cartons per outer carton
Total 20,000 pcs per outer carton
In every shipping lot, only the last pack will be non-full packing

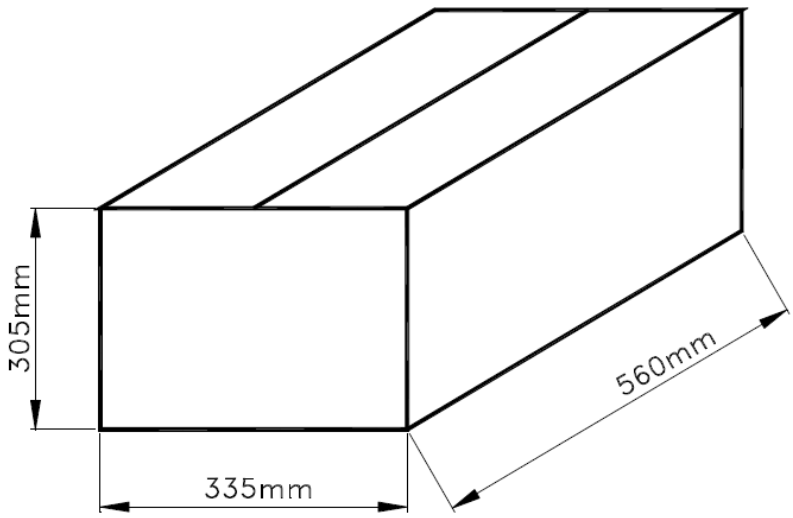

8. Bin Table Specification

Luminous Intensity Iv (mcd) IF@20mA		
Bin Code	**Min.**	**Max.**
V	4200	5500
W	5500	7200
X	7200	9300

Note: Tolerance of each bin limit is ±15%

Hue Ranks	Chromaticity Coordinates, CC(x, y), IF@20mA				
A0	x	0.280	0.264	0.283	0.296
	y	0.248	0.267	0.305	0.276
B1	x	0.283	0.287	0.330	0.330
	y	0.305	0.295	0.339	0.360
B2	x	0.296	0.287	0.330	0.330
	y	0.276	0.295	0.339	0.318

Note: Color Coordinates Measurement allowance is ±0.01

C.I.E. 1931 Chromaticity Diagram

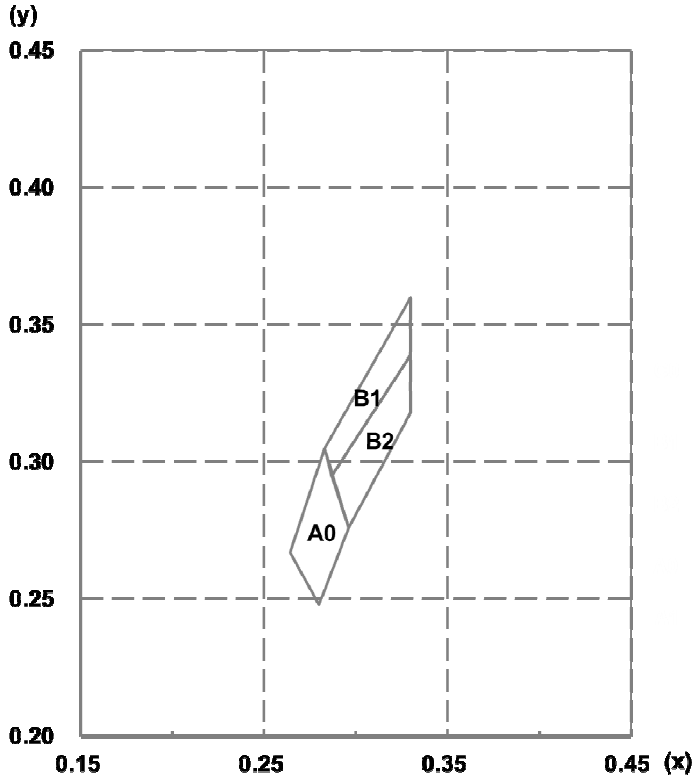

9. CAUTIONS

9.1. Application

This LED lamp is good for application of indoor and outdoor sign, also ordinary electronic equipment.

9.2. Storage

The storage ambient for the LEDs should not exceed 30℃ temperature or 70% relative humidity. It is re commended that LEDs out of their original packaging are used within three months. For extended storage out of their original packaging, it is recommended that the LEDs be stored in a sealed container with appropriate desiccant or in desiccators with nitrogen ambient.

9.3. Cleaning

Use alcohol-based cleaning solvents such as isopropyl alcohol to clean the LEDs if necessary.

9.4. Lead Forming & Assembly

During lead forming, the leads should be bent at a point at least 3mm from the base of LED lens. Do not use the base of the lead frame as a fulcrum during forming. Lead forming must be done before soldering, at normal temperature. During assembly on PCB, use minimum clinch force possible to avoid excessive mechanical stress.

9.5. Soldering

When soldering, leave a minimum of 2mm clearance from the base of the lens to the soldering point. Dipping the lens into the solder must be avoided. Do not apply any external stress to the lead frame during soldering while the LED is at high temperature.

Recommended soldering conditions:

Soldering iron		Wave soldering	
Temperature Soldering time Position	350℃ Max. 3 seconds Max. (one time only) No closer than 2mm from the base of the epoxy bulb	Pre-heat Pre-heat time Solder wave Soldering time Dipping Position	100℃ Max. 60 seconds Max. 260℃ Max. 5 seconds Max. No lower than 2mm from the base of the epoxy bulb

Note: Excessive soldering temperature and/or time might result in deformation of the LED lens or catastrophic failure of the LED. IR reflow is not suitable process for through hole type LED lamp product.

9.6. Drive Method

An LED is a current-operated device. In order to ensure intensity uniformity on multiple LEDs connected in parallel in an application, it is recommended that a current limiting resistor be incorporated in the drive circuit, in series with each LED as shown in Circuit A below.

Circuit model (A)

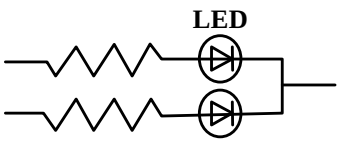

Circuit model (B)

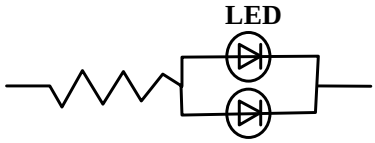

(A) Recommended circuit
(B) The brightness of each LED might appear different due to the differences in the I-V characteristics of those LEDs.

9.7. ESD (Electrostatic Discharge)

Static Electricity or power surge will damage the LED.

Suggestions to prevent ESD damage:

- Use a conductive wrist band or anti- electrostatic glove when handling these LEDs
- All devices, equipment, and machinery must be properly grounded
- Work tables, storage racks, etc. should be properly grounded
- Use ion blower to neutralize the static charge which might have built up on surface of the LEDs plastic lens as a result of friction between LEDs during storage and handing

Suggested checking list:

Training and Certification

9.7.1.1. Everyone working in a static-safe area is ESD-certified?
9.7.1.2. Training records kept and re-certification dates monitored?

Static-Safe Workstation & Work Areas

9.7.2.1. Static-safe workstation or work-areas have ESD signs?
9.7.2.2. All surfaces and objects at all static-safe workstation and within 1 ft measure less than 100V?
9.7.2.3. All ionizer activated, positioned towards the units?
9.7.2.4. Each work surface mats grounding is good?

Personnel Grounding

9.7.3.1. Every person (including visitors) handling ESD sensitive (ESDS) items wear wrist strap, heel strap or conductive shoes with conductive flooring?
9.7.3.1. If conductive footwear used, conductive flooring also present where operator stand or walk?
9.7.3.2. Garments, hairs or anything closer than 1 ft to ESD items measure less than 100V*?
9.7.3.3. Every wrist strap or heel strap/conductive shoes checked daily and result recorded for all DLs?
9.7.3.4. All wrist strap or heel strap checkers calibration up to date?
Note: *50V for Blue LED.

Device Handling

9.7.4.1. Every ESDS items identified by EIA-471 labels on item or packaging?
9.7.4.2. All ESDS items completely inside properly closed static-shielding containers when not at static-safe workstation?
9.7.4.3. No static charge generators (e.g. plastics) inside shielding containers with ESDS items?
9.7.4.4. All flexible conductive and dissipative package materials inspected before reuse or recycle?

Others

9.7.5.1. Audit result reported to entity ESD control coordinator?
9.7.5.2. Corrective action from previous audits completed?
9.7.5.3. Are audit records complete and on file?

10. Reliability Test

Classification	Test Item	Test Condition	Sample Size	Reference Standard
Endurance Test	Operation Life	Ta = Under Room Temperature IF = 30mA Test Time= 1000hrs	45 PCS (CL=90%; LTPD=5%)	MIL-STD-750D:1026 MIL-STD-883G:1005
	High Temperature High Humidity storage (THB)	Ta = 85℃ RH = 85% Test Time= 1000hrs	45 PCS (CL=90%; LTPD=5%)	MIL-STD-202G:103B JEITA ED-4701:100 103
	Steady state Operation Life of High Humidity Heat	Ta = 85℃, RH= 85 % IF = 8.5mA Test Time= 1000hrs	76 PCS (CL=90%; LTPD=3%)	JESD22-A101C
	Low Temperature Operation Life of	Ta = -30℃ IF = 30mA Test Time= 1000hrs	45 PCS (CL=90%; LTPD=5%)	
	High Temperature Storage	Ta= 105 ± 5℃ Test Time= 1000hrs	45 PCS (CL=90%; LTPD=5%)	MIL-STD-750D:1031 MIL-STD-883G:1008 JEITA ED-4701:200 201
	Low Temperature Storage	Ta= -55 ± 5℃ Test Time= 1000hrs	45 PCS (CL=90%; LTPD=5%)	JEITA ED-4701:200 202
Environmental Test	Temperature Cycling	100℃ ～ 25℃ ～ -40℃ ～ 25℃ 30mins 5mins 30mins 5mins Test time: 200 Cycles	76 PCS (CL=90%; LTPD=3%)	MIL-STD-750D:1051 MIL-STD-883G:1010 JEITA ED-4701:100 105 JESD22-A104C
	Thermal Shock	100 ± 5℃ ～ -30℃ ± 5℃ 15mins 15mins Test time: 200 Cycles	76 PCS (CL=90%; LTPD=3%)	MIL-STD-750D:1056 MIL-STD-883G:1011 MIL-STD-202G:107G JESD22-A106B
	Solder Resistance	T.sol = 260 ± 5℃ Dwell Time= 10±1 seconds 2mm from the base of the epoxy bulb	11 PCS (CL=90%; LTPD=18.9%)	MIL-STD-750D:2031 JEITA ED-4701: 300 302
	Solderability	T. sol = 245 ± 5℃ Dwell Time= 5 ± 0.5 seconds (Lead Free Solder, Coverage ≧95% of the dipped surface)	11 PCS (CL=90%; LTPD=18.9%)	MIL-STD-750D:2026 MIL-STD-883G:2003 MIL-STD-202G:208H IPC/EIA J-STD-002
	Soldering Iron	T. sol = 350 ± 5℃ Dwell Time= 3.5 ± 0.5 seconds	11 PCS (CL=90%; LTPD=18.9%)	MIL-STD-202G:208H JEITA ED-4701:300 302

11. Others

The appearance and specifications of the product may be modified for improvement, without prior notice.