LITEON®
OPTOELECTRONICS

Through Hole Lamp Product Data Sheet

LTL-1BEDJH185

Spec No. :DS20-2017-0024
Effective Date: 03/16/2017
Revision: -

LITE-ON DCC
RELEASE

BNS-OD-FC001/A4

LITE-ON Technology Corp. / Optoelectronics
No.90,Chien 1 Road, Chung Ho, New Taipei City 23585, Taiwan, R.O.C.
Tel: 886-2-2222-6181 Fax: 886-2-2221-1948 / 886-2-2221-0660
http://www.liteon.com/opto

Through Hole Lamp

LTL-1BEDJH185

Rev	Description	By	Date
P001	Preliminary new specification(RDR-20170253-01)	Chalerm Ya	08/28/2014
Above data for PD and Customer tracking only			
-	Upload on OPNC system	Mike Chang	03/02/2017

Through Hole Lamp
LTL-1BEDJH185

1. Description

CBI (Circuit Board Indicator) is a black plastic right angle Holder (Housing) which mates with Lite-On LED lamps. Lite-On CBI is available in a wide variety of packages, including top-view (Spacer) or right angle and horizontal or vertical arrays which is stackable and easy to assembly.

1. 1. Features

- Designed for ease in circuit board assembly.
- Black case enhance contrast ratio.
- Low power consumption & High efficiency.
- Lead free product & RoHS Compliant.
- White diffused lens.
- T-1 lamp : Source bi-color are yellow 590nm/ yellow green 573nm chips.

1.2. Applications

- Computer
- Communication
- Consumer
- Industrial

2. Outline Dimensions

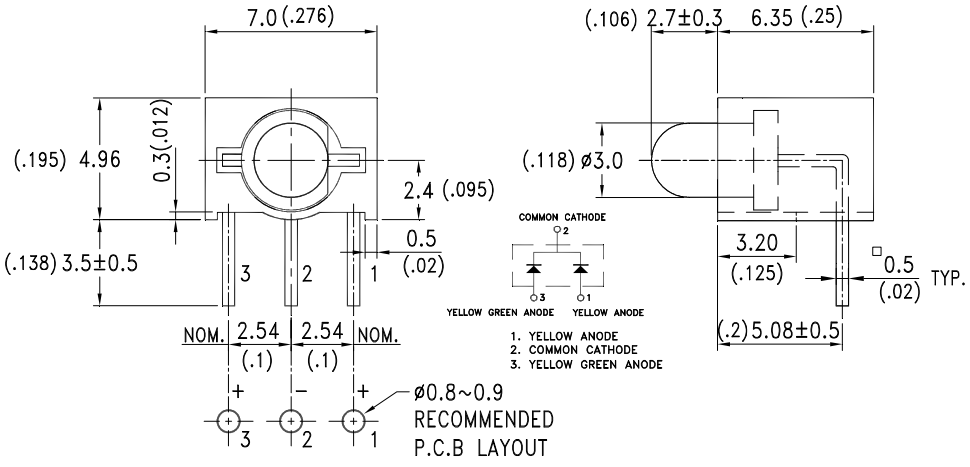

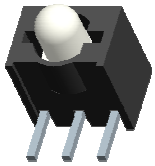

Notes :

1. All dimensions are in millimeters (inches).
2. Tolerance is ±0.25mm (.010") unless otherwise noted.
3. The Holder (Housing) material is plastic black.
4. LED lamp is yellow / yellow green bi-color with white diffused lens.
5. Specifications are subject to change without notice.

3. Absolute Maximum Ratings at TA=25℃

Parameter	Yellow	Yellow Green	Unit
Power Dissipation	60	100	mW
Peak Forward Current (Duty Cycle≦1/10, Pulse Width≦10ms)	80	120	mA
DC Forward Current	20	30	mA
Operating Temperature Range	-40℃ to + 85℃		
Storage Temperature Range	-40℃ to + 100℃		
Lead Soldering Temperature [2.0mm (.079") From Body]	260℃ for 5 Seconds Max.		

4. Electrical / Optical Characteristics at TA=25℃

Parameter	Symbol	Color	Min.	Typ.	Max.	Unit	Test Condition
Radiant Intensity	Iv	Yellow Yellow Green	13.5 13.5	19 19	100 100	mcd	IF = 20mA Note 1,4
Viewing Angle	2θ1/2	Yellow Yellow Green		75 75		deg	Note 2 (Fig.6)
Peak Emission Wavelength	λP	Yellow Yellow Green		585 565		nm	Measurement @Peak (Fig.1)
Dominant Wavelength	λd	Yellow Yellow Green	585 568	590 573	595 578	nm	IF = 20mA ,Note 3
Spectral Line Half-Width	Δλ	Yellow Yellow Green		35 30		nm	
Forward Voltage	VF	Yellow Yellow Green		2.1 2.1	2.6 2.6	V	IF = 20mA
Reverse Current	IR	Yellow Yellow Green			100	μA	VR = 5V Note 6

NOTE:

1. Luminous intensity is measured with a light sensor and filter combination that approximates the CIE eye-response curve.
2. θ1/2 is the off-axis angle at which the luminous intensity is half the axial luminous intensity.
3. The dominant wavelength, λd is derived from the CIE chromaticity diagram and represents the single wavelength which defines the color of the device.
4. Iv guarantee must be included with ±30% testing tolerance.
5. Reverse current is controlled by dice source.
6. Reverse voltage (VR) condition is applied for IR test only. The device is not designed for reverse operation.

5. Typical Electrical / Optical Characteristics Curves

(25℃ Ambient Temperature Unless Otherwise Noted)

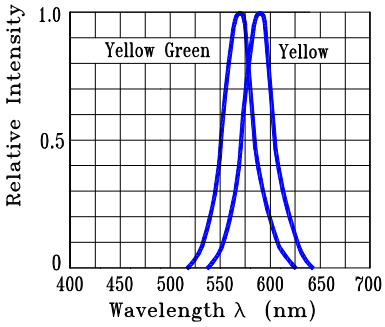

Fig.1 Relative Intensity VS. Wavelength

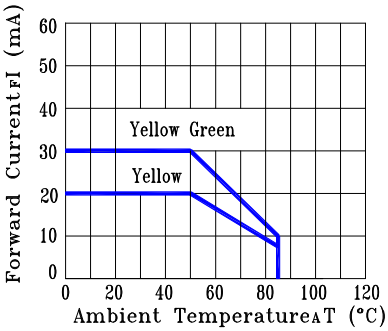

Fig.2 Forward Current Derating Curve

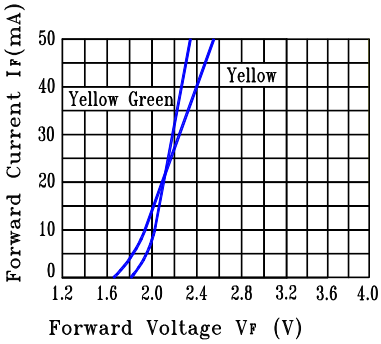

Fig.3 Forward Current vs. Forward Voltage

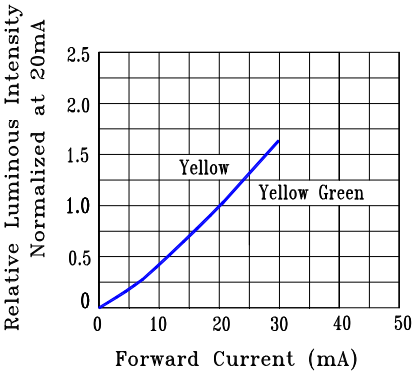

Fig.4 Relative Luminous Intensity vs. Forward Current

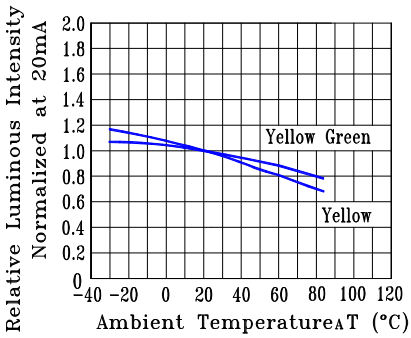

Fig.5 Relative Luminous Intensity VS. Ambient Temperature

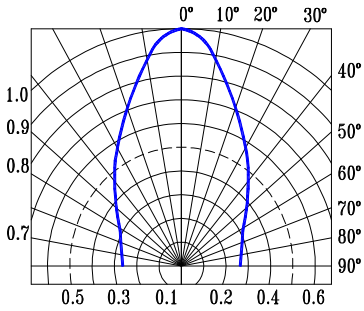

Fig.6 Spatial Distribution

6. Packing Specification

500, 200 or 100 pcs per packing bag

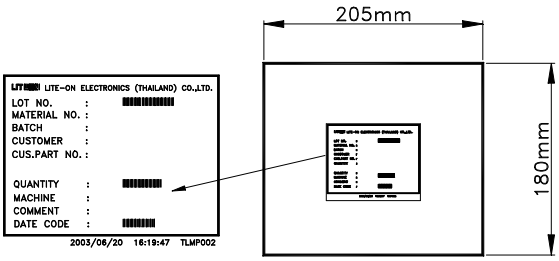

10 packing bags per inner carton
Total 5,000 pcs per inner carton

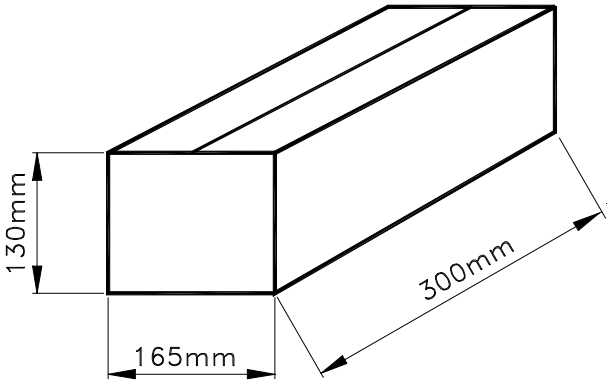

8 Inner cartons per outer carton
Total 40,000 pcs per outer carton
In every shipping lot, only the last pack will be non-full packing

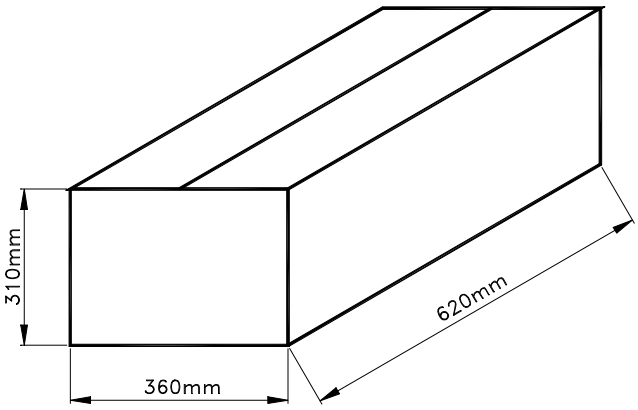

7. Bin Table Specification

Luminous Intensity Unit : mcd @20mA				
Bin Code	Yellow		Yellow Green	
	Min.	Max.	Min.	Max.
1	13.5	40	40	100
2	13.5	40	13.5	40
3	40	100	13.5	40
4	40	100	40	100

Note: Tolerance of each bin limit is ±30%

8. CAUTIONS

8.1. Application

This LED lamp is good for application of indoor and outdoor sign, also ordinary electronic equipment.

8.2. Storage

The storage ambient for the LEDs should not exceed 30℃ temperature or 70% relative humidity. It is re commended that LEDs out of their original packaging are used within three months. For extended storage out of their original packaging, it is recommended that the LEDs be stored in a sealed container with appropriate desiccant or in desiccators with nitrogen ambient.

8.3. Cleaning

Use alcohol-based cleaning solvents such as isopropyl alcohol to clean the LEDs if necessary.

8.4. Lead Forming & Assembly

During lead forming, the leads should be bent at a point at least 3mm from the base of LED lens. Do not use the base of the lead frame as a fulcrum during forming. Lead forming must be done before soldering, at normal temperature. During assembly on PCB, use minimum clinch force possible to avoid excessive mechanical stress.

8.5. Soldering

When soldering, leave a minimum of 2mm clearance from the base of the lens/Holder to the soldering point. Dipping the lens/Holder into the solder must be avoided. Do not apply any external stress to the lead frame during soldering while the LED is at high temperature.

Recommended soldering conditions:

Soldering iron		Wave soldering	
Temperature Soldering time Position	350℃ Max. 3 seconds Max. (one time only) No closer than 2mm from the base of the epoxy bulb	Pre-heat Pre-heat time Solder wave Soldering time Dipping Position	120℃ Max. 100 seconds Max. 260℃ Max. 5 seconds Max. No lower than 2mm from the base of the epoxy bulb

Note: Excessive soldering temperature and/or time might result in deformation of the LED lens or catastrophic failure of the LED. IR reflow is not suitable process for through hole type LED lamp product. Max temperature of wave soldering is not means that Holder's HDT/Melting temperature.

8.6. Drive Method

An LED is a current-operated device. In order to ensure intensity uniformity on multiple LEDs connected in parallel in an application, it is recommended that a current limiting resistor be incorporated in the drive circuit, in series with each LED as shown in Circuit A below.

Circuit model (A)

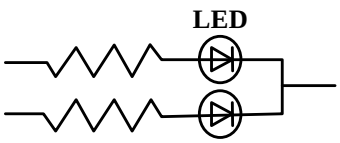

Circuit model (B)

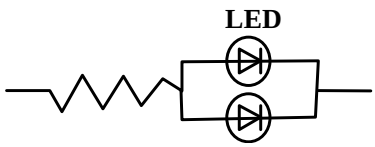

(A) Recommended circuit
(B) The brightness of each LED might appear different due to the differences in the I-V characteristics of those LEDs.

8.7. ESD (Electrostatic Discharge)

Static Electricity or power surge will damage the LED.

Suggestions to prevent ESD damage:

- Use a conductive wrist band or anti- electrostatic glove when handling these LEDs
- All devices, equipment, and machinery must be properly grounded
- Work tables, storage racks, etc. should be properly grounded
- Use ion blower to neutralize the static charge which might have built up on surface of the LEDs plastic lens as a result of friction between LEDs during storage and handing

Suggested checking list:

Training and Certification

8.7.1.1. Everyone working in a static-safe area is ESD-certified?
8.7.1.2. Training records kept and re-certification dates monitored?

Static-Safe Workstation & Work Areas

8.7.2.1. Static-safe workstation or work-areas have ESD signs?
8.7.2.2. All surfaces and objects at all static-safe workstation and within 1 ft measure less than 100V?
8.7.2.3. All ionizer activated, positioned towards the units?
8.7.2.4. Each work surface mats grounding is good?

Personnel Grounding

8.7.3.1. Every person (including visitors) handling ESD sensitive (ESDS) items wear wrist strap, heel strap or conductive shoes with conductive flooring?
8.7.3.1. If conductive footwear used, conductive flooring also present where operator stand or walk?
8.7.3.2. Garments, hairs or anything closer than 1 ft to ESD items measure less than 100V*?
8.7.3.3. Every wrist strap or heel strap/conductive shoes checked daily and result recorded for all DLs?
8.7.3.4. All wrist strap or heel strap checkers calibration up to date?
Note: *50V for Blue LED.

Device Handling

8.7.4.1. Every ESDS items identified by EIA-471 labels on item or packaging?
8.7.4.2. All ESDS items completely inside properly closed static-shielding containers when not at static-safe workstation?
8.7.4.3. No static charge generators (e.g. plastics) inside shielding containers with ESDS items?
8.7.4.4. All flexible conductive and dissipative package materials inspected before reuse or recycle?

Others

8.7.5.1. Audit result reported to entity ESD control coordinator?
8.7.5.2. Corrective action from previous audits completed?
8.7.5.3. Are audit records complete and on file?

9. Reliability Test

Classification	Test Item	Test Condition	Sample Size	Reference Standard
Endurance Test	Operation Life	Ta = Under room temperature IF = per datasheet maximum drive current Test Time= 1000hrs	22 PCS (CL=90%; LTPD=10%)	MIL-STD-750D:1026 (1995) MIL-STD-883G:1005 (2006)
	High Temperature High Humidity storage	Ta = 60℃ RH = 90% Test Time= 240hrs	22 PCS (CL=90%; LTPD=10%)	MIL-STD-202G:103B (2002) JEITA ED-4701:100 103 (2001)
	High Temperature Storage	Ta= 105 ± 5℃ Test Time= 1000hrs	22 PCS (CL=90%; LTPD=10%)	MIL-STD-750D:1031 (1995) MIL-STD-883G:1008 (2006) JEITA ED-4701:200 201 (2001)
	Low Temperature Storage	Ta= -55 ± 5℃ Test Time= 1000hrs	22 PCS (CL=90%; LTPD=10%)	JEITA ED-4701:200 202 (2001)
Environmental Test	Temperature Cycling	100℃ ～ 25℃ ～ -40℃ ～ 25℃ 30mins 5mins 30mins 5mins 30 Cycles	22 PCS (CL=90%; LTPD=10%)	MIL-STD-750D:1051 (1995) MIL-STD-883G:1010 (2006) JEITA ED-4701:100 105 (2001) JESD22-A104C (2005)
	Thermal Shock	100 ± 5℃ ～ -30℃ ± 5℃ 15mins 15mins 30 Cycles (<20 secs transfer)	22 PCS (CL=90%; LTPD=10%)	MIL-STD-750D:1056 (1995) MIL-STD-883G:1011 (2006) MIL-STD-202G:107G (2002) JESD22-A106B (2004)
	Solder Resistance	T.sol = 260 ± 5℃ Dwell Time= 10±1 seconds 3mm from the base of the epoxy bulb	11 PCS (CL=90%; LTPD=18.9%)	MIL-STD-750D:2031(1995) JEITA ED-4701: 300 302 (2001)
	Solderability	T. sol = 245 ± 5℃ Dwell Time= 5 ± 0.5 seconds (Lead Free Solder, Coverage ≧95% of the dipped surface)	11 PCS (CL=90%; LTPD=18.9%)	MIL-STD-750D:2026 (1995) MIL-STD-883G:2003 (2006) MIL-STD-202G:208H (2002) IPC/EIA J-STD-002 (2004)
	Soldering Iron	T. sol = 350 ± 5℃ Dwell Time= 3.5 ± 0.5 seconds	11 PCS (CL=90%; LTPD=18.9%)	MIL-STD-202G:208H (2002) JEITA ED-4701:300 302 (2001)

10. Others

The appearance and specifications of the product may be modified for improvement, without prior notice.